Parts Breakdown

LXFD03

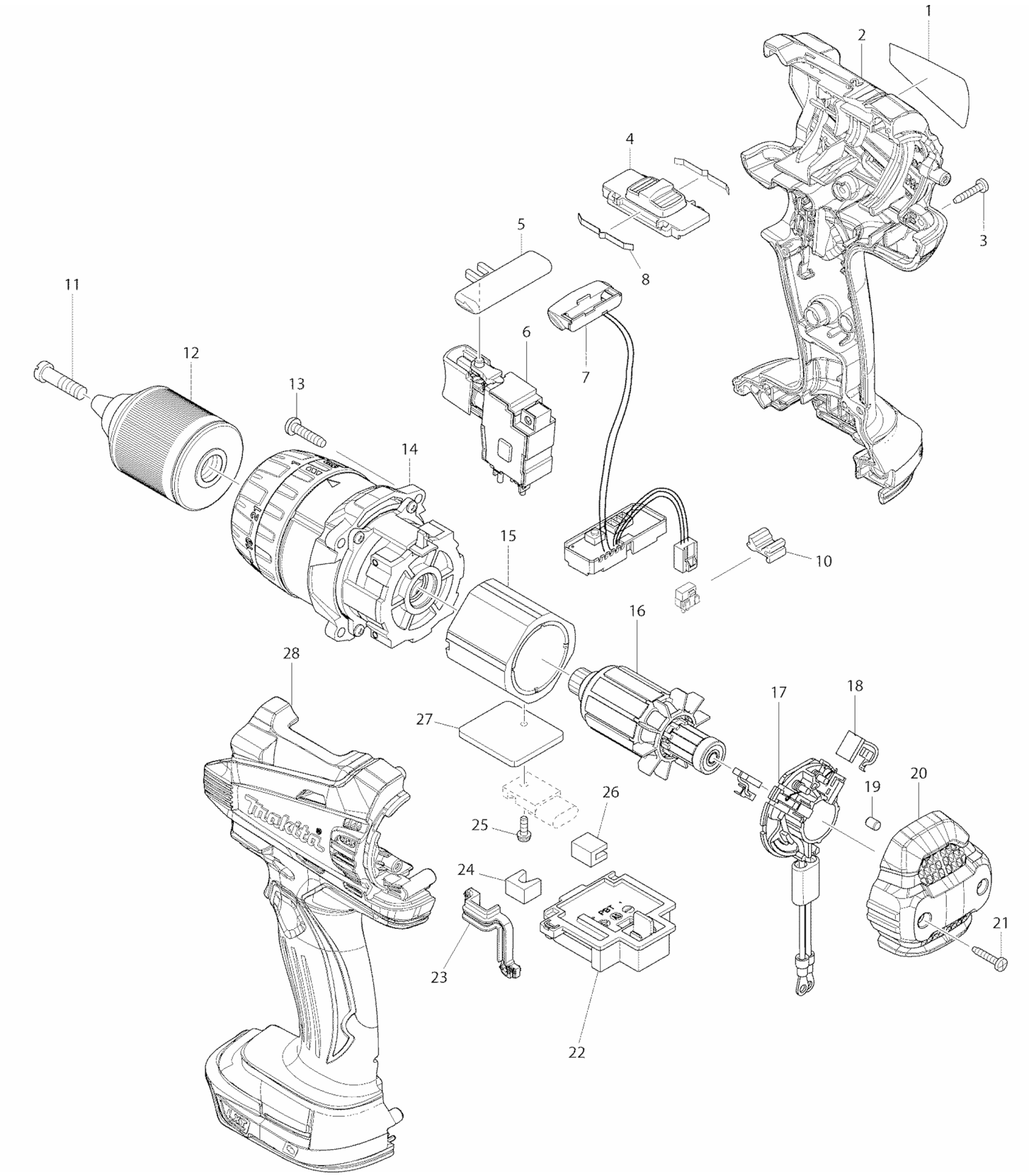

Parts Breakdown

LXFD03

Products with multiple versions are listed in subsiding order with the newest version on top not indented

Fig #	Part ID	Part Name	Quantity
1	897142-7	NAME PLATE, LXFD03	1
2	187432-9	HOUSING SET, LXPH03	1
3	266130-9	TAPPING SCREW PT3X16, LXPH03	7
4	126100-9	SPEED CHANGE LEVER ASS'Y, LXPH03	1
5	419250-0	F/R CHANGE LEVER, LXPH03	1
6	650683-2	SWITCH, LXPH03	1
7	620139-9	LED CIRCUIT, LXPH03	1
8	232220-0	LEAF SPRING, LXPH03	2
10	424026-2	CUSHION, LXPH03	1
11	251468-5	F.H. SCREW M6X22, LXPH03	1
12	766015-4	KEYLESS DRILL CHUCK, LXPH03	1
13	265995-6	TAPPING SCREW 4X18, BO4556K	4
14	126098-0	GEAR ASS'Y, LXFD03	1
15	638989-8	YOKE UNIT, LXPH03	1
16	619301-1	ARMATURE, LXPH03	1
17	638614-1	BRUSH HOLDER, LXPH03	1
18	CB440	CARBON BRUSH SET, 195021-6	1
	195021-6	CARBON BRUSH SET, 195021-6	
19	263032-0	RUBBER PIN 4, LXPH03	2
20	453394-6	REAR COVER, LXPH03	1
21	266130-9	TAPPING SCREW PT3X16, LXPH03	2
22	643859-8	TERMINAL, LXPH03	1
23	424430-5	SEAL, LXDT04	1
24	423422-1	SPONGE A, LXDT04	1
25	911013-5	P.H. SCREW M3X10, LXFD01CW	1
26	423423-9	SPONGE B, LXDT04	1
27	689176-2	HEAT SINK, LXPH03	1
28	187432-9	HOUSING SET, LXPH03	1
	126130-0	GRIP ASS'Y, LXFD03	1
	251314-2	SCREW M4X12, LXPH03	2
	346449-3	BELT HOOK SILM & SHORT FOR CORDLESS TOO	1
	452947-8	BIT HOLDER, LXPH03	1
	784637-8	PHIL./SLOTTED BIT 2-45, LXFD01CW	2
	***DC18RA	N/A	1
	BL1830	18V LXT LITHIUM-ION BATTERY	2
	195324-8	BATTERY BL1830	
	450128-8	BATTERY COVER FOR 18V/14.4V LI-ION BATTERY	1
	821532-2	PLASTIC TOOL CASE, LXFD03	1
	810300-8	CAUTION LABEL, LXPH03	1