Parts Breakdown

HRH01

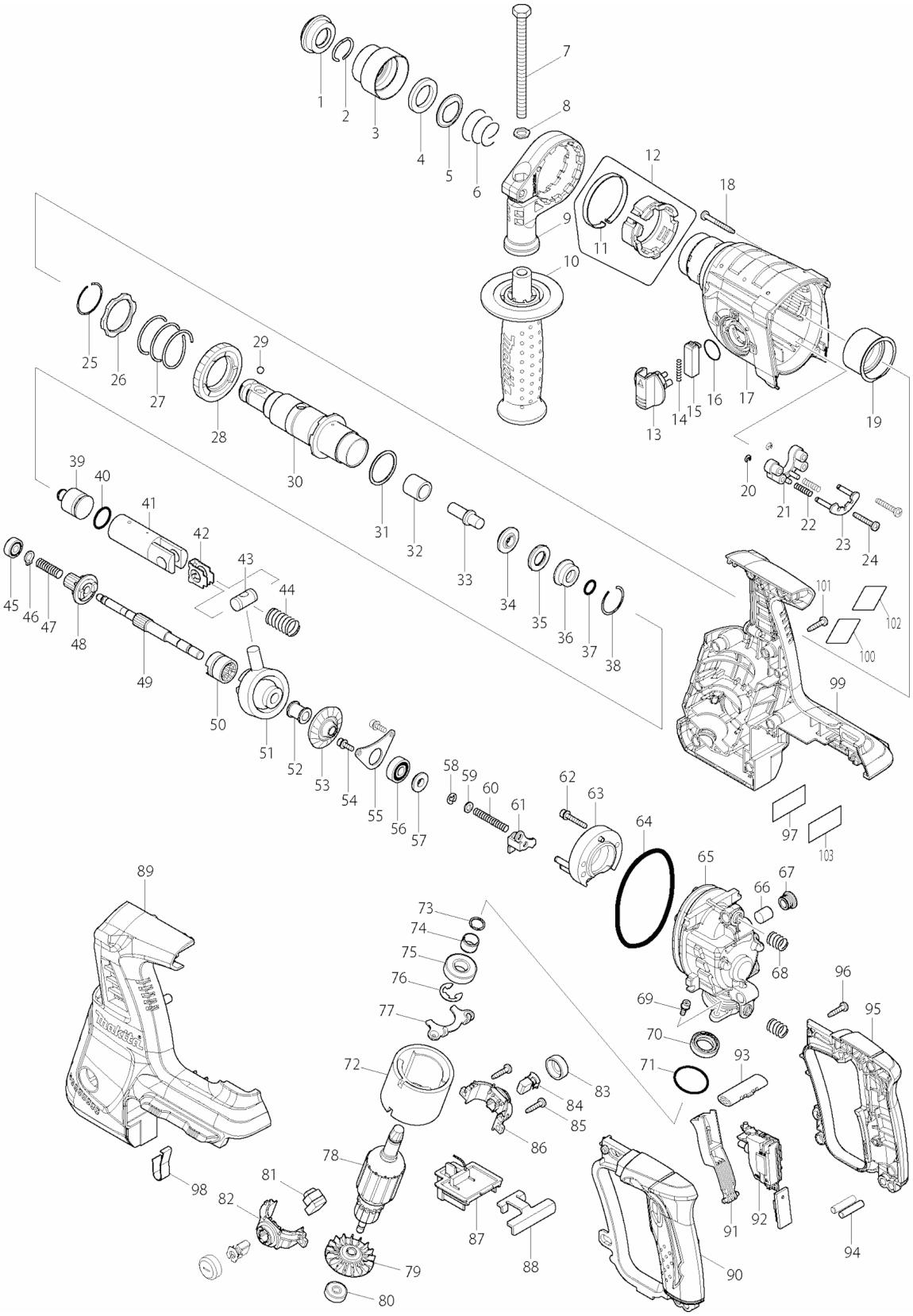

Products with multiple versions are listed in subsiding order with the newest version on top not indented

Fig #	Part ID	Part Name	Quantity
1	286263-4	CAP 35, HR2450F	1
2	233940-9	RING SPRING 19, HR2450F	1
3	417629-9	CHUCK COVER,HR2450F	1
4	257241-1	RING 21, HR2450F	1
5	345187-4	GUIDE WASHER, HR2450F	1
6	233916-6	CONICAL COMP. SPRING 21-29, HR2450F	1
7	921923-8	HEX. BOLT M8 X 120, HP2050F	1
8	345280-4	HEX. WASHER, HP2050F	1
9	417630-4	GRIP BASE, HP1640	1
10	158057-6	GRIP 36 CPL., HR2811F	1
13	450980-4	CHANGE LEVER, BHR261	1
14	233279-0	COMP.SPRING 4, BHR200SH	1
15	453706-3	LOCK BUTTON, HRH01	1
16	213278-8	O RING 17,HR2450F	1
17	141699-3	GEAR HOUSING CPL., HRH01	1
18	266351-3	TAPPING SCREW 4X35, 9557PB	4
19	153290-5	NEEDLE BEARING CPL., HR2450F	1
20	961017-7	STOP RING E-3, HR2475	2
21	417796-0	GUIDE BASE, HR2455	1
22	233344-5	COMP. SPRING 4, HR2450F	2
23	163430-7	LOCK PLATE CPL., HR2450F	1
24	266374-1	TAPPING SCREW 4X25, GA7021	2
25	233929-7	RING SPRING 29, BHR240	1
26	267460-1	WASHER 31, HRH01	1
27	233401-9	COMP. SPRING 32, BHR240	1
28	227109-5	SPUR GEAR 51, BHR240	1
29	216022-2	STEEL BALL 7.0, HR2400	1
30	158574-6	TOOL HOLDER CPL., HR2475	1
31	267229-3	FLAT WASHER 28, BHR240	1
32	331769-8	SLEEVE 9, HR2470F	1
33	324669-9	IMPACT BOLT, BHR240	1
34	324402-9	RING 10, BHR240	1
35	421955-0	CUSHION RING 13, BHR240	1
36	324216-6	O RING CASE, HR2455	1
37	213073-6	O RING 9,HR2455	1
38	233917-4	RING SPRING 28, HR2450F	1
39	324214-0	STRIKER, HR2450F	1
40	213227-5	O RING 16M, HR2455	1
41	318132-2	PISTON CYLINDER, HR2470F	1
42	346036-8	GUIDE PLATE, BHR261	1
43	324215-8	PISTON JOINT, HR2450F	1
44	234098-7	DOMPRESSION SPRING 14, BHR261	1
45	211012-0	BALL BEARING 606ZZ, HR2410	1
46	961003-8	RETAINING RING S-7, 9015B	1
47	233343-7	COMP. SPRING 7, HR2450F	1
48	227179-4	SPUR GEAR 10, HR2470F	1
49	325976-3	CAM SHAFT, BHR261	1
50	331992-5	CLUTCH CAM, BHR241	1
51	219014-0	SWASH BEARING 10, HR2455	1
52	325640-6	SLEEVE 9, BHR261	1
53	227549-7	SPIRAL BEVEL GEAR 26, BHR261	1
54	266273-7	H.S.H. BOLT M4X12, HR2450F	2
55	346038-4	BEARING RETAINER B, LXRH01	1
56	211032-4	B. BEARING 608ZZ, LXPK01	1
57	324212-4	RING 8, LXRH01	1
58	961011-9	STOP RING E-4, LS1016L	1
59	941102-2	F. WASHER 5, LS1016L	1
60	233342-9	COMP. SPRING 6, HR2450F	1

61	345220-2	CHANGE PLATE, BHR261	1
62	922148-7	H.S.H. BOLT M4X25, 6922NB	2
63	158944-9	INNER SUPPORT CPL., BHR261	1
64	213728-3	O-RING 68, BHR261	1
65	318392-6	INNER HOUSING, BHR261	1
66	443143-9	FILTER, BHR261	1
67	424185-2	CAP, BHR261	1
68	234097-9	DOMPRESSION SPRING 10, BHR261	2
69	266273-7	H.S.H. BOLT M4X12, HR2450F	2
70	213231-4	OIL SEAL 15, HR4500C	1
71	213437-4	O RING 28, AG125	1
72	632828-4	YOKE UNIT, HRH01	1
73	961082-6	RETAINING RING WR12, BHR261	1
74	331596-3	SLEEVE 12, HR4041C	1
75	211131-2	BALL BEARING 6001DDW,BO4556	1
76	961016-9	STOP RING E-10, BJR182	1
77	346037-6	BEARING RETAINER A, BHR261	1
78	519235-7	ARMATURE ASS'Y, BHR261	1
79	240037-7	FAN 44, HRH01	1
80	210022-4	BALL BEARING 626DDW, LXRH01	1
81	631850-8	LIGHT CIRCUIT, BHR261	1
82	638660-4	BRUSH HOLDER, HRH01	1
83	643829-7	HOLDER CAP, BJR182Z	2
84	CB442	CARBON BRUSH SET, 195023-2	1
	195023-2	CARBON BRUSH SET, 195023-2	
85	266326-2	TAPPING SCREW PT 4X18, 5007MG	2
86	638661-2	BRUSH HOLDER, HRH01	1
87	638978-3	TERMINAL UNIT, HRH01	1
88	346039-2	SUPPORT PLATE, BHR261	1
89	187231-9	HOUSING SET, HRH01	1
90	188639-0	HANDLE SET, BHR261	1
91	450981-2	SWITCH LEVER, BHR261	1
92	650619-1	SWITCH, BHR261	1
93	450979-9	F/R CHANGE LEVER, BHR261	1
94	256261-2	PIN 6, BHR261	2
95	188639-0	HANDLE SET, BHR261	1
96	266326-2	TAPPING SCREW PT 4X18, 5007MG	4
97	897494-6	SERIAL NO. LABEL, HRH01	1
98	344903-1	VIBRATION ISOLATOR PLATE, HRH01	1
99	187231-9	HOUSING SET, HRH01	1
100	897491-2	NAME PLATE, HRH01	1
101	266326-2	TAPPING SCREW PT 4X18, 5007MG	9
102	893038-0	CLEAR LABEL, BHR261	1
103	893072-0	CLEAR LABEL, LXRH01	1
	194683-7	HAMMER BIT GREASE 100ML, HM & HR SERIES	1
	324219-0	DEPTH GAUGE, HP1640	1
	443122-7	CLOTH F/WIPING OIL, HR4001C	1
	194874-0	LXT 36V BATTERY	2
	451153-2	BATTERY COVER, BHR261	1
	***DC36RA	N/A	1
	141407-2	N/A	1
	800D74-3	N/A	2