Parts Breakdown

EM2650LH

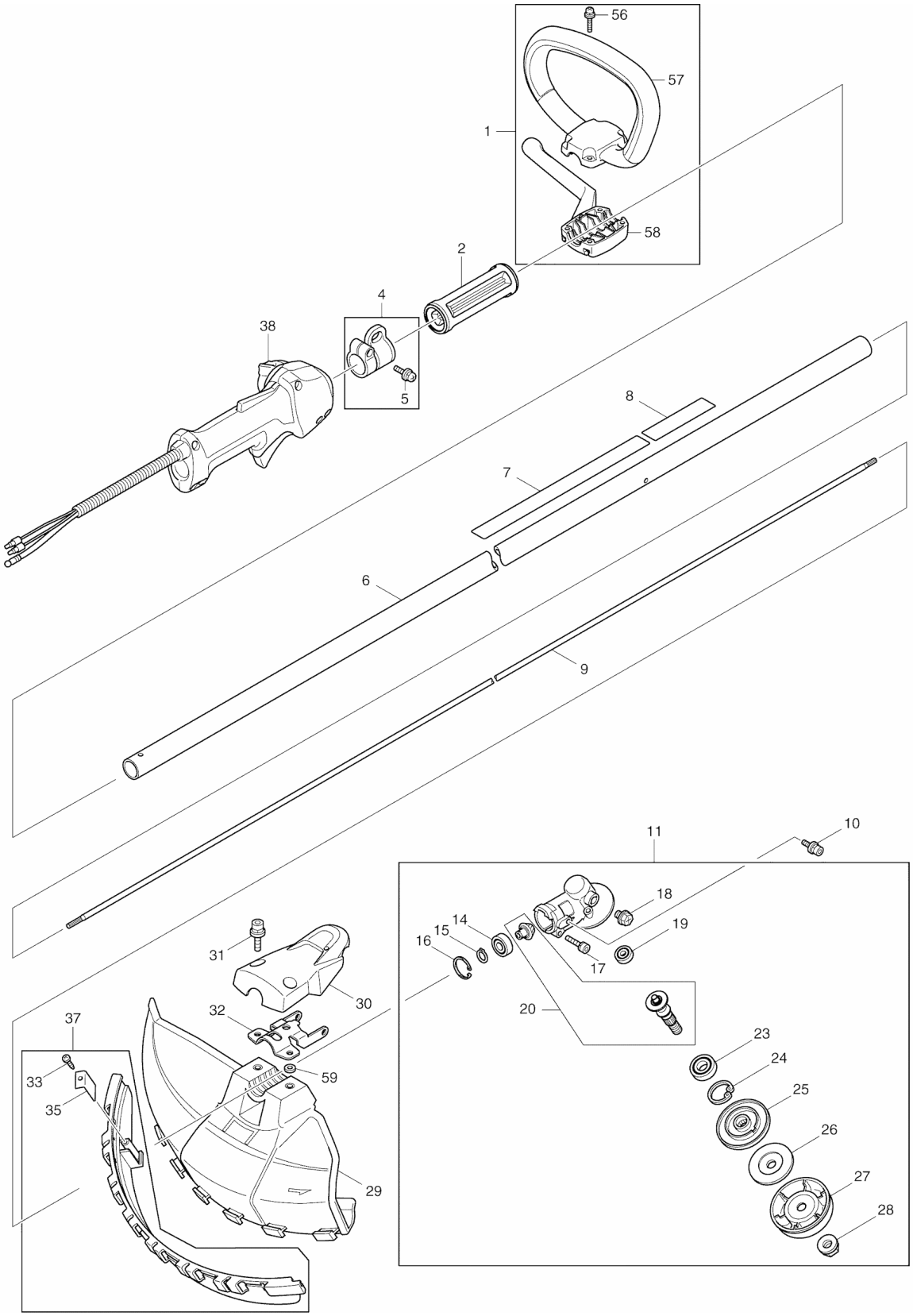

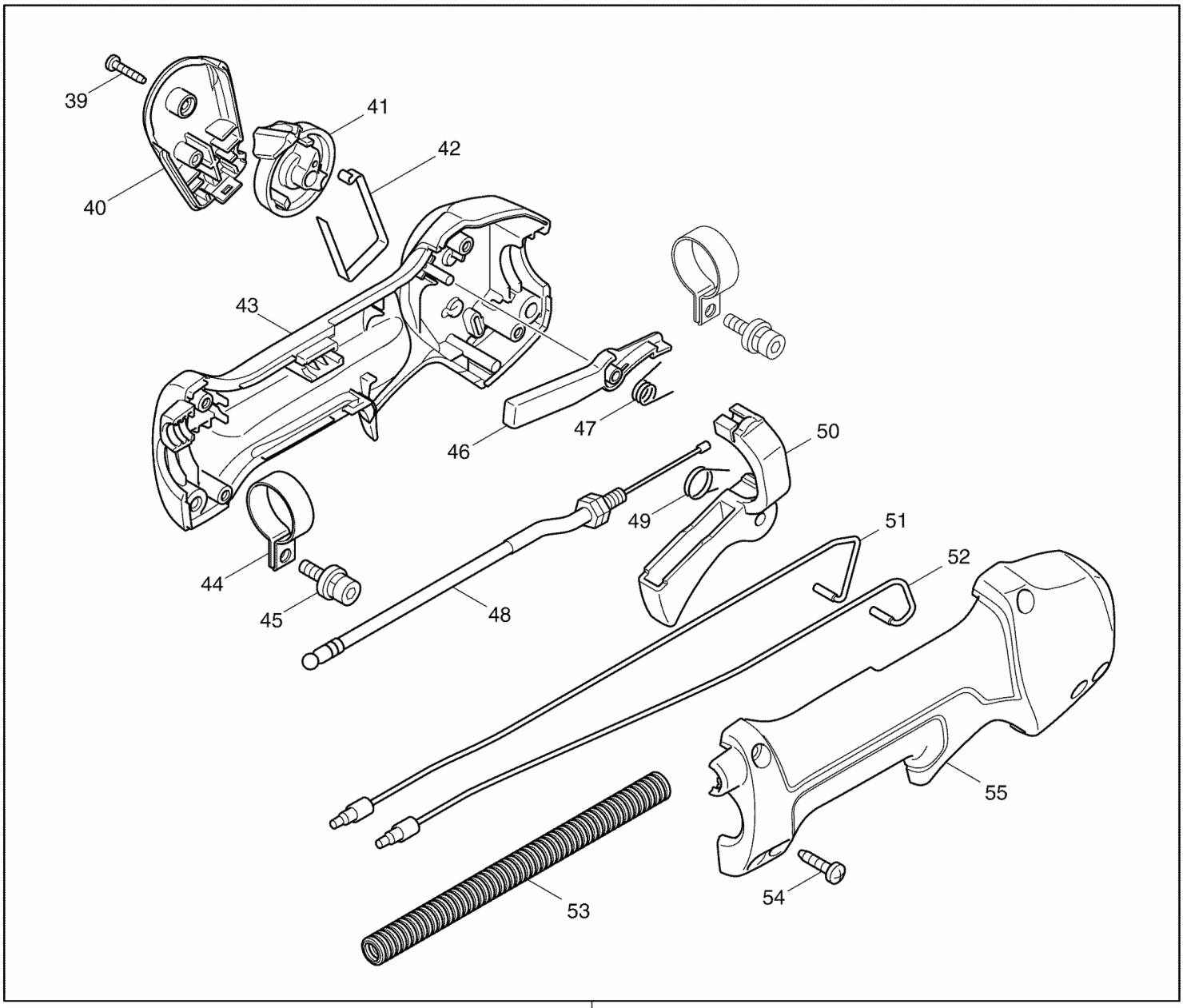
39
40
41
42
43
44
45
46
47
48
49
50
51
52
53
54
55
38

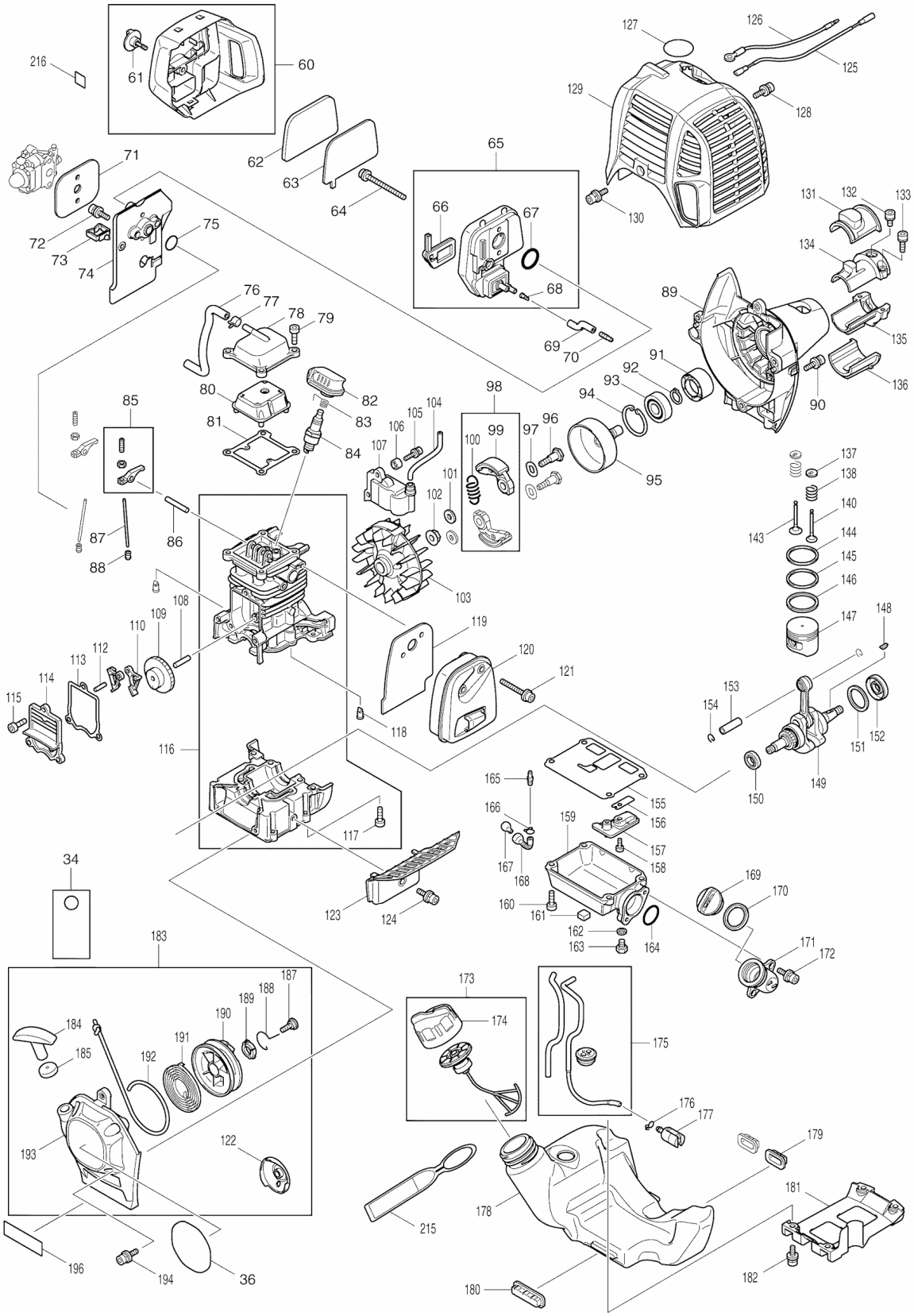
216
61
60
62
63
64
65
66
67
68
69
70
71
72
73
74
75
76
77
78
79
80
81
82
83
84
85
86
87
88
89
90
91
92
93
94
95
96
97
98
99
100
101
102
103
104
105
106
107
108
109
110
112
113
114
115
116
117
118
119
120
121
122
123
124
125
126
127
128
129
130
131
132
133
134
135
136
137
138
140
143
144
145
146
147
148
149
150
151
152
153
154
155
156
157
158
159
160
161
162
163
164
165
166
167
168
169
170
171
172
173
174
175
176
177
178
179
180
181
182
183
184
185
187
188
189
190
191
192
193
194
196
215
34
36

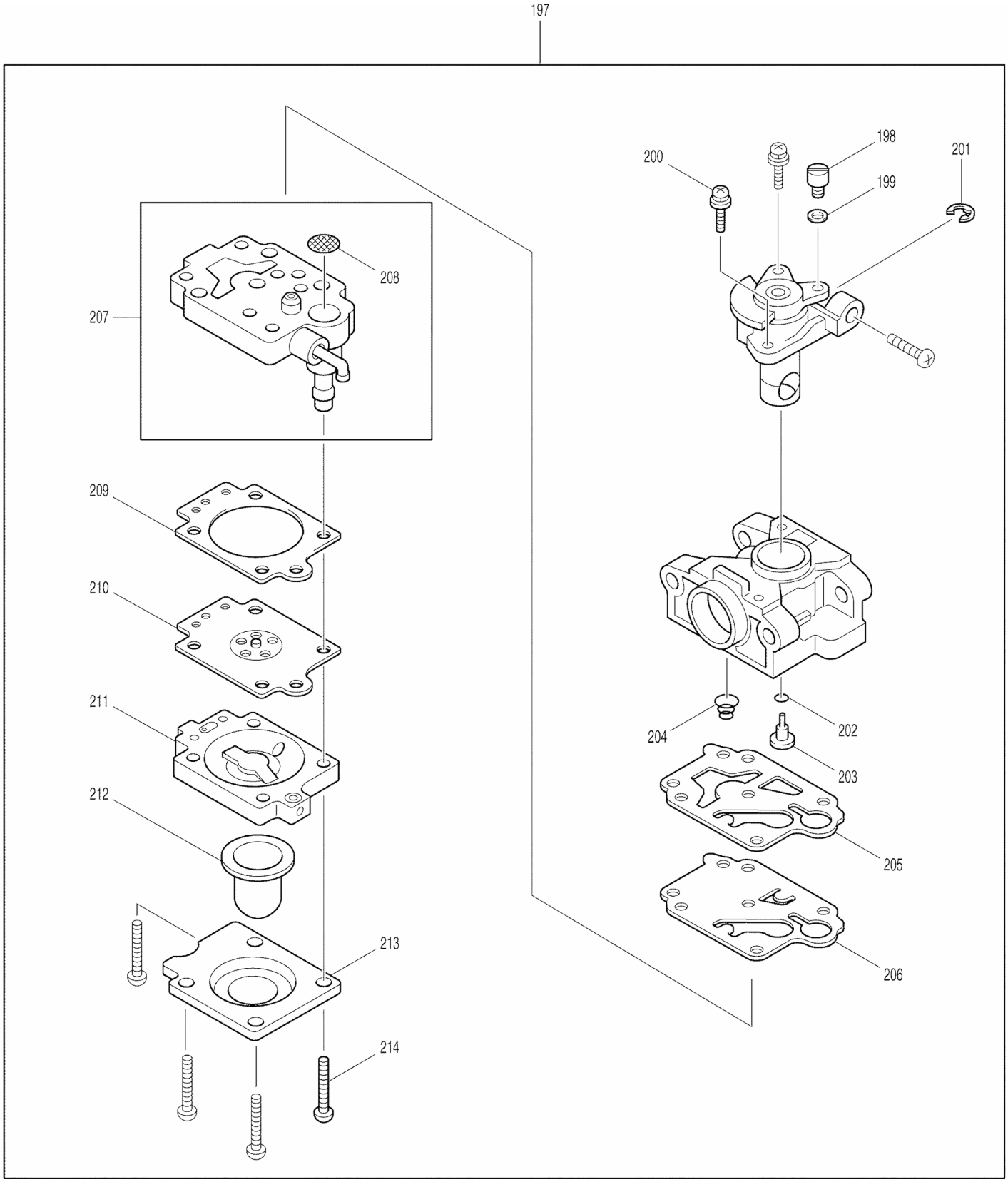
197
198
199
200
201
202
203
204
205
206
207
208
209
210
211
212
213
214

Products with multiple versions are listed in subsiding order with the newest version on top not indented

Fig #	Part ID	Part Name	Quantity
1	195215-3	N/A	1
2	451601-1	N/A	1
4	195143-2	HAGER SET, EM2650LH	1
5	911233-1	P.H. SCREW M5X20, TW1000	1
6	140431-2	SHAFT PIPE CPL., EM2650LH	1
	890281-2	CAUTION LABEL, EM2650LH	
	891185-1	N/A	
8	819312-8	MAKITA LOGO LABEL, EM2650LH	1
9	324893-4	SHAFT, EM2650LH	1
10	922218-2	H.S.H. BOLT M5X14 WITH WR, EM2650LH	2
	125556-3	GEAR CASE ASS'Y, EM2650UH	
	126102-5	GEAR CASE ASS'Y, EM2650LH	
14	210049-4	BALL BEARING 609ZZ, EM2650LH	1
15	961005-4	RETAINING RING S-9, LXDG01	1
16	962103-7	RETAINING RING R-24, AN611	1
17	922241-7	H.S.H. BOLT M5X25, AN451-T2	1
18	265590-2	+ HEX. BOLT M8X10 , EM2650LH	1
19	211019-6	BALL BEARING 626, 9901	1
	188902-1	CUTTER SHAFT SET, EM2650LH	
	188902-1	CUTTER SHAFT SET, EM2650LH	
	188866-9	N/A	
23	210115-7	BALL BEARING 6001LLU, EM2650LH	1
24	962106-1	RETAINING RING R-28,GD0800C	1
25	331861-0	RECEIVE WASHER, EM2650LH	1
26	346084-7	CLAMP WASHER, EM2650UH	1
27	168526-9	CUP, EM2650UH	1
	264025-0	HEX. NUT M10-1.25LH, EM2650UH	
	422088-4	RUBBER SLEEVE 9, EM2650LH	
29	452260-4	PROTECTOR, EM2650UH	1
30	451097-6	N/A	1
31	266579-3	N/A	2
32	346073-2	PROTECTOR CLAMP, EM2650LH	1
33	266326-2	TAPPING SCREW PT 4X18, 5007MG	1
34	819432-8	CAUTION TAG, EM2650LH	1
35	346074-0	CUTTER, EM2650UH	1
36	819766-9	EM2650LH MODEL NO. LABEL, EM2650LH	1
37	135398-7	PROTECTOR EXTENSION ASS'Y, EM2650UH	1
38	125776-9	CONTROL LEVER ASS'Y, EM2650LH	1
39	266130-9	TAPPING SCREW PT3X16, LXPH03	1
40	451595-0	SWITCH COVER, EM2650LH	1
41	451594-2	SWITCH LEVER, EM2650LH	1
42	232251-9	LEAF SPRING, EM2650LH	1
43	188832-6	LEVER CASE SET, EM2650LH	1
44	346248-3	CLAMP 24, EM2650LH	2
	346248-3	CLAMP 24, EM2650LH	
45	922218-2	H.S.H. BOLT M5X14 WITH WR, EM2650LH	2
46	451593-4	LOCK LEVER, EM2650LH	1
47	233541-3	TORSION SPRING 7, EM2650LH	1
48	168571-4	CONTROL CABLE, EM2650LH	1
49	233540-5	TORSION SPRING 11, EM2650LH	1
50	451592-6	THROTTLE LEVER, EM2650LH	1
51	638714-7	LEAD UNIT (LONG,MALE), EM2650LH	1
52	638713-9	LEAD UNIT (SHORT,FEMALE), EM2650LH	1
53	452071-7	CORRUGATE TUBE, EM2650LH	1
54	266326-2	TAPPING SCREW PT 4X18, 5007MG	4
55	188832-6	LEVER CASE SET, EM2650LH	1
56	911253-5	P.H. SCREW M5X30, 2030S	4
57	451598-4	N/A	1

58	451599-2	N/A	1
59	413143-3	WASHER, RBC2510	2
60	126202-1	CLEANER COVER ASS'Y, EM2650LH	1
	125746-8	CLEANER COVER ASS'Y, EM2650LH	
61	265791-2	THUMB SCREW M4, EM2650LH	1
	443171-4	AIR CLEANER ELEMENT, EM2650LH	
	443171-4	AIR CLEANER ELEMENT, EM2650LH	
	443141-3	AIR CLEANER ELEMENT,EM4250	
	443169-1	AIR CLEANER ELEMENT, EM2650LH	
	443169-1	AIR CLEANER ELEMENT, EM2650LH	
	443140-5	AIR CLEANER ELEMENT,EM4250	
	266618-9	H.S. BUTTON HEAD BOLT M5X60, EM2650LH	
	266618-9	H.S. BUTTON HEAD BOLT M5X60, EM2650LH	
	266601-6	N/A	
	126198-6	CLEANER PLATE ASS'Y, EM2650LH	
	126198-6	CLEANER PLATE ASS'Y, EM2650LH	
	126004-5	CLEANER PLATE ASS'Y, EM2650LH	
	126004-5	CLEANER PLATE ASS'Y, EM2650LH	
	125833-3	N/A	
	162346-3	SEPARATOR PLATE, EM2650LH	
	162346-3	SEPARATOR PLATE, EM2650LH	
	162324-3	SEPARATOR PLATE, EM2650LH	
	162324-3	SEPARATOR PLATE, EM2650LH	
	162300-7	N/A	
67	213540-1	O RING 15, EM2650LH	1
68	424316-3	CHECK VALVE, EM2650LH	2
	424316-3	CHECK VALVE, EM2650LH	
69	422099-9	PIPE, EM2650LH	1
	422062-2	PIPE, EM2650LH	
70	325665-0	JOINT PIPE, EM2650LH	1
71	442153-3	CARBURETOR GASKET, EM2650LH	1
72	266787-6	H.S.H BOLT M5X18 W/WR, EM2650LH	2
	922228-9	H.S.H. BOLT M5X18 WITH WR, EM2650LH	
73	451825-9	CLAMP, EM2650LH	1
74	451729-5	CLEANER COVER ASS'Y, EM2650LH	1
75	213547-7	O-RING 12, EM2650LH	1
76	422109-2	N/A	1
	422055-9	BREATHER PIPE, EM2650LH	
77	345918-1	HOSE CLAMP, EM2650LH	1
	318745-9	ROCKER COVER OUTER, EM2650LH	
	318745-9	ROCKER COVER OUTER, EM2650LH	
	318587-1	N/A	
	922222-1	H.S.H. BOLT M5X16, HM1211B	
	922222-1	H.S.H. BOLT M5X16, HM1211B	
	266570-1	N/A	
	453860-3	ROCKER COVER INNER, EM2650LH	
	453860-3	ROCKER COVER INNER, EM2650LH	
	452795-5	ROCKER COVER INNER, EM2650LH	
	452795-5	ROCKER COVER INNER, EM2650LH	
	451728-7	N/A	
81	162304-9	ROCKER COVER GASKET, EM2650LH	1
82	424302-4	PLUG CAP, EM2650LH	1
83	324891-8	PLUG CAP SPRING, EM2650LH	1
84	168534-0	SPARK PLUG CMR4A, EM2650LH	1
85	125554-7	ROCKER ARM ASS'Y, EM2650LH	2
86	256200-2	PIN 5, 2704	1
87	256865-0	ROD 2.5, EM2650LH	2
88	325668-4	SPRING RETAINER, EM2650LH	2
89	451735-0	CLUTCH CASE, EM2650LH	1
90	922228-9	H.S.H. BOLT M5X18 WITH WR, EM2650LH	3
91	450569-8	SPACER, EM2650LH	1

92	961052-5	RETAINING RING S-12, LS1016L	1
	210111-5	BALL BEARING 6201LLU, EM2650LH	
	210111-5	BALL BEARING 6201LLU, EM2650LH	
	210111-5	BALL BEARING 6201LLU, EM2650LH	
94	962151-6	RETAINING RING R-32, 9005B	1
95	168609-5	CLUTCH DRUM, EM2650LH	1
96	266457-7	SHOULDER HEX. BOLT M6X25, EM2650LH	2
97	267817-6	WASHER 8, EM2650LH	2
98	126135-0	CLUTCH ASS'Y, EM2650LH	1
	125518-1	CLUTCH ASS'Y, EM2650LH	
99	168498-8	CLUTCH SHOE, EM2650LH	2
100	231881-3	TENSION SPRING 7, EM2650LH	1
	231858-8	TENSION SPRING 6, EM2650LH	
101	267812-6	WASHER 6, EM2650LH	2
102	264039-9	FRANGE NUT, EM2650LH	1
103	318569-3	FLYWHEEL, EM2650LH	1
104	444021-6	TUBE, EM2650LH	1
105	266602-4	HEX. SOCKET HEAD BOLT M4X20, EM2650LH	2
106	452049-0	SPACER, EM2650LH	2
107	168559-4	IGNITION COIL, EM2650LH	1
108	268238-5	PIN 5, EM2650LH	1
109	125552-1	CAM GEAR ASS'Y, EM2650LH	1
110	313169-4	CAM LIFTER, EM2650LH	2
112	268239-3	PIN 4, EM2650LH	1
113	162274-2	CAM GEAR COVER GASKET, EM2650LH	1
114	318443-5	CAM GEAR COVER, EM2650LH	1
	922222-1	H.S.H. BOLT M5X16, HM1211B	
	922222-1	H.S.H. BOLT M5X16, HM1211B	
	266570-1	N/A	
	135478-9	CYLINDER BLOCK ASS'Y, EM2650LH	
	135478-9	CYLINDER BLOCK ASS'Y, EM2650LH	
	135403-0	N/A	
	922222-1	H.S.H. BOLT M5X16, HM1211B	
	922222-1	H.S.H. BOLT M5X16, HM1211B	
	266570-1	N/A	
118	424201-0	CHECK VALVE, EM2650LH	2
	346331-6	MUFFLER GASKET, EM2650LH	
	346331-6	MUFFLER GASKET, EM2650LH	
	345916-5	MUFFLER GASKET, EM4251	
120	168554-4	EXHAUST MUFFLER, EM2650LH	1
121	266440-4	HEX SOCKET HEAD BOLT M5X40, EM2650LH	2
122	168483-1	PULLEY, EM2650LH	1
123	451731-8	MUFFLER PLATE, EM2650LH	1
124	922218-2	H.S.H. BOLT M5X14 WITH WR, EM2650LH	1
125	638707-4	LEAD UNIT, EM2650LH	1
126	638708-2	LEAD UNIT, EM2650LH	1
127	808633-3	4 STROKE INDICATION LABEL, EM2650LH	1
128	922218-2	H.S.H. BOLT M5X14 WITH WR, EM2650LH	1
129	453266-5	CYLINDER COVER, EM2650LH	1
	451734-2	CYLINDER COVER, EM2650LH	
130	922218-2	H.S.H. BOLT M5X14 WITH WR, EM2650LH	1
131	424082-2	BUFFER RUBBER, EM2650LH	1
132	922211-6	HEX. SOCKET HAD BOLT M5X12, EM2650LH	1
133	922226-3	H. S. H. BOLT M5X18, LS1016L	2
134	318249-1	PIPE HOLDER, EM2650LH	1
135	318250-6	PIPE HOLDER, EM2650LH	1
136	424083-0	BUFFER RUBBER, EM2650LH	1
137	424200-2	SPACER, EM2650LH	2
138	234108-0	COMPRESSION SPRING 9, EM2650LH	2
140	325669-2	EXHAUST VALVE, EM2650LH	1
143	325670-7	INTAKE VALVE, EM2650LH	1

	195145-8	PISTON RING SET, EM4251	
	257298-2	PISTON RING (TOP), EM2650LH	
	257298-2	PISTON RING (TOP), EM2650LH	
145	257299-0	PISTON RING (SECOND), EM2650LH	1
146	257300-1	PISTON RING 34, EM2650LH	1
147	318441-9	PISTON, EM2650LH	1
148	254040-2	WOODRUFF KEY 3, EM2650LH	1
	126204-7	CRANK SHAFT ASS'Y, EM2650LH	
	126204-7	CRANK SHAFT ASS'Y, EM2650LH	
	135481-0	CRANK SHAFT ASS'Y, EM2650LH	
	135481-0	CRANK SHAFT ASS'Y, EM2650LH	
	135406-4	N/A	
150	213148-1	OIL SEAL 10, EM2650LH	1
	213148-1	OIL SEAL 10, EM2650LH	
151	267400-9	FLAT WASHER 23, EM2650LH	1
	267400-9	FLAT WASHER 23, EM2650LH	
152	213147-3	OIL SEAL 12, EM2650LH	1
	213147-3	OIL SEAL 12, EM2650LH	
153	257781-9	PISTON PIN, EM2650LH	1
154	233976-8	CLIP, EM2650LH	2
	162345-5	OIL CASE GASKET, EM2650LH	
	162345-5	OIL CASE GASKET, EM2650LH	
	162323-5	OIL CASE GASKET, EM2650LH	
	162323-5	OIL CASE GASKET, EM2650LH	
	162303-1	N/A	
156	346083-9	LEAD VALVE, EM2650LH	1
157	318910-0	RETAINER PLATE, EM2650LH	1
	318590-2	RETAINER PLATE, EM2650LH	
	922112-8	H.S.H. BOLT M4X10, BO5001	
	922112-8	H.S.H. BOLT M4X10, BO5001	
	266569-6	N/A	
159	318588-9	OIL CASE, EM2650LH	1
	922222-1	H.S.H. BOLT M5X16, HM1211B	
	922222-1	H.S.H. BOLT M5X16, HM1211B	
	266570-1	N/A	
161	424344-8	DAMPER, EM2650LH	1
162	346305-7	GASKET, EM2650LH	1
163	266611-3	HEX BOLT M6X8, EM2650LH	1
164	213548-5	O-RING 20, EM2650LH	1
	325665-0	JOINT PIPE, EM2650LH	
	325665-0	JOINT PIPE, EM2650LH	
	325898-7	N/A	
166	282020-8	HOSE CLAMP, EM2650LH	1
167	325666-8	OIL WEIGHT, EM2650LH	1
168	424301-6	OIL TUBE, EM2650LH	1
169	452047-4	OIL CAP, EM2650LH	1
170	424343-0	GASKET, EM2650LH	1
171	452048-2	OIL PIPE, EM2650LH	1
172	922218-2	H.S.H. BOLT M5X14 WITH WR, EM2650LH	2
173	125728-0	FUEL TANK CAP ASS'Y, EM2650LH	1
174	451739-2	FUEL TANK CAP, EM2650LH	1
175	168755-4	TUBE CPL., EM2650LH	1
	168555-2	TUBE CPL., EM2650LH	
176	282020-8	HOSE CLAMP, EM2650LH	1
177	163518-3	GASOLINE FILTER, EM2650LH	1
178	452249-2	FUEL TANK, EM2650LH	1
179	424080-6	BUFFER RUBBER, EM2650LH	2
180	424081-4	BUFFER RUBBER, EM2650LH	1
181	451737-6	TANK GUARD, EM2650LH	1
182	922218-2	H.S.H. BOLT M5X14 WITH WR, EM2650LH	4
183	195308-6	RECOIL STARTER SET, EM2650LH	1

	125752-3	RECOIL STARTER ASS'Y, EM2650LH	
184	424319-7	STARTER KNOB, EM2650LH	1
185	424359-5	DAMPER, EM2650LH	1
187	266585-8	TAPPING SCREW 5X12, EM2650LH	1
188	325923-4	SWING ARM, EM2650LH	1
189	451938-6	COLLAR, EM2650LH	1
190	451937-8	REEL, EM2650LH	1
191	232258-5	SPIRAL SPRING, EM2650LH	1
192	444023-2	STARTER ROPE, EM2650LH	1
193	451733-4	STARTER CASE, EM2650LH	1
194	922223-9	H.S.H. BOLT M5X16 WITH WR, EM2650LH	4
196	816565-0	MAKITA LOGO LABEL, EM2650LH	1
197	168762-7	CARBURETOR, EM2650LH	1
	168591-8	CARBURETOR, EM2650LH	
198	325922-6	SWIVEL, EM2650LH	1
199	413140-9	WASHER, EM2650LH	1
200	266581-6	PAN HEAD SCREW M3X8, EM2650LH	2
201	257964-1	STOP RING E-3, EM2650LH	1
202	213538-8	O RING 2, EM2650LH	1
203	325985-2	JET, EM2650LH	1
204	234183-6	CONICAL COMPRESSION SPRING 5-9, EM2650LH	1
205	442155-9	PUMP GASKET, EM2650LH	1
206	168575-6	PUMP DIAPHRAGM, EM2650LH	1
207	141737-1	N/A	1
	140437-0	PUMP BODY, EM2650LH	
208	352021-1	N/A	1
	352010-6	INLET SCREEN, EM2650LH	
209	442154-1	METERING DIAPHRAGM GASKET, EM2650LH	1
210	168620-7	METERING DIAPHRAGM, EM2650LH	1
211	140438-8	AIR PURGE BODY, EM2650LH	1
212	424314-7	PRIMER PUMP, EM2650LH	1
213	346270-0	PRIMER PUMP COVER, EM2650LH	1
214	266582-4	TAPPING SCREW 3X24, EM2650LH	4
215	810455-9	CAUTION PLATE, EM2650LH	1
216	800F73-7	N/A	1
	891985-9	INDICATION LABEL, EM2650LH	
	941151-9	F. WASHER 6, 5007NB	
	941152-7	F. WASHER 6, HM1500	
	941152-7	F. WASHER 6, HM1500	
	443170-6	FELT, EM2650LH	1
	352020-3	SEPARATOR MESH, EM2650LH	1
	453865-3	SEPARATOR CASE, EM2650LH	1
	453862-9	OIL CASE PLATE, EM2650LH	1
	808723-2	CAUTION LABEL, EM2650LH	1
	125516-5	N/A	1
	242072-1	N/A	1
	782233-6	BOX DRIVER 10-16, EM2650LH	
	783013-3	BOX DRIVER 16-17, EM2650UH	
	783217-7	HEX WRENCH 5, 2704X1 Stand	1
	783232-1	HEX. WRENCH 5, EM2650UH	
	783217-7	HEX WRENCH 5, 2704X1 Stand	
	783202-0	HEX WRENCH 4, 2107F	
	783223-2	WRENCH 4, EM2650LH	
	783223-2	WRENCH 4, EM2650LH	
	831304-7	ACCESSORY BAG, EM2650LH	1
	196324-1	N/A	
	T-01753	BUMP & FEED TRIMMER HEAD, EM2650LH	
	T-01753	BUMP & FEED TRIMMER HEAD, EM2650LH	
	123147-4	NYLON HEAD, EM2650LH	
	122936-4	N/A	
	195149-0	CUTTER ASSEMBLY SET, EM2650LH	

195626-2	LOOP HANDLE SET, EM2650LH	1
196117-6	PROTECTOR SET, EM2650LH	1
195780-2	PROTECTOR SET, EM2650LH	
195826-4	4ST. ENGINE OIL 10W-30 80CC, EM2650LH	1
195500-4	OIL SET, EM2650LH	
266427-6	TAPPING SCREW 4X12, 5377MG	1
452219-1	CHOKE PLATE, EM2650LH	1
452220-6	CHOKE LEVER, EM2650LH	1
808723-2	CAUTION LABEL, EM2650LH	1