Parts Breakdown

DCS34

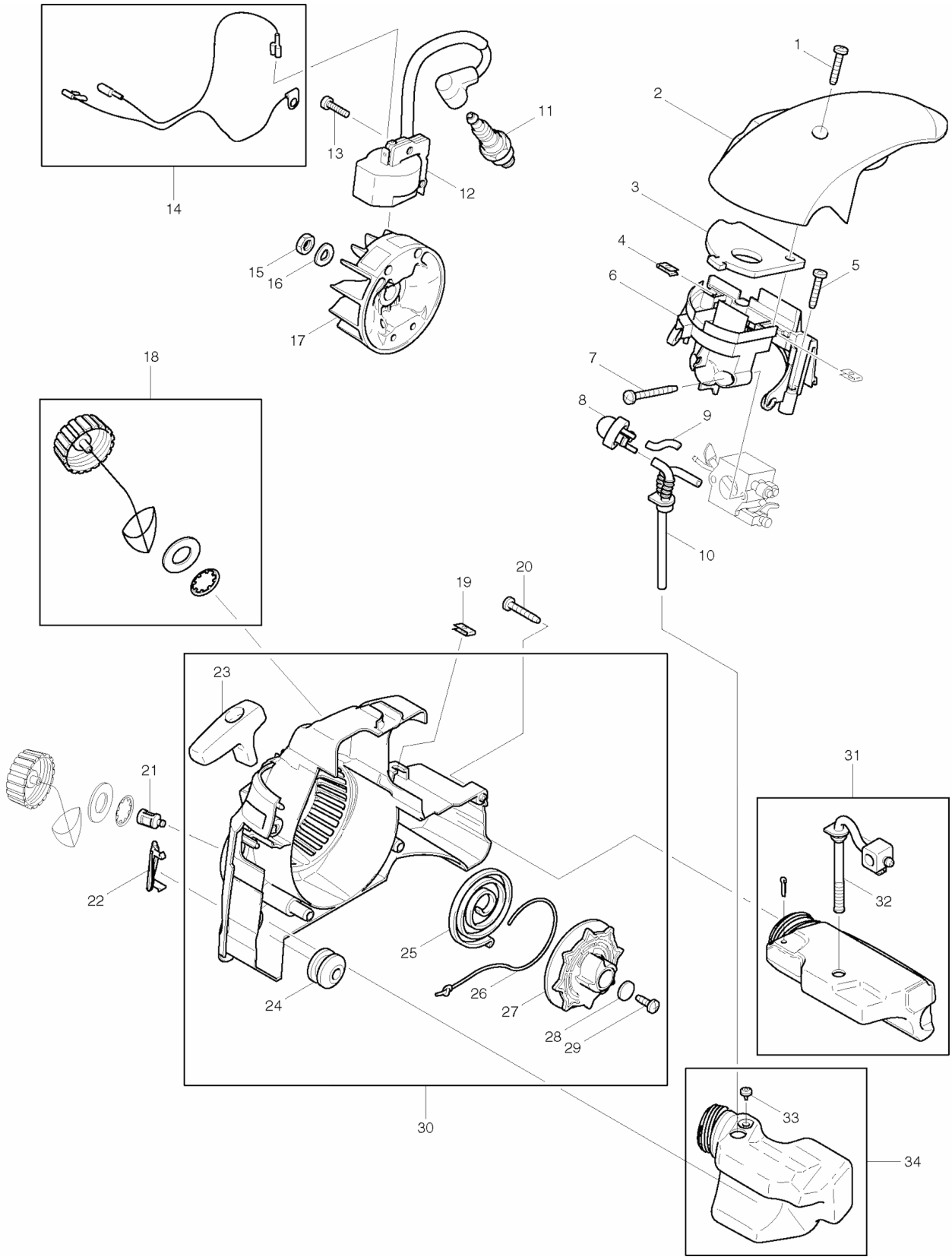

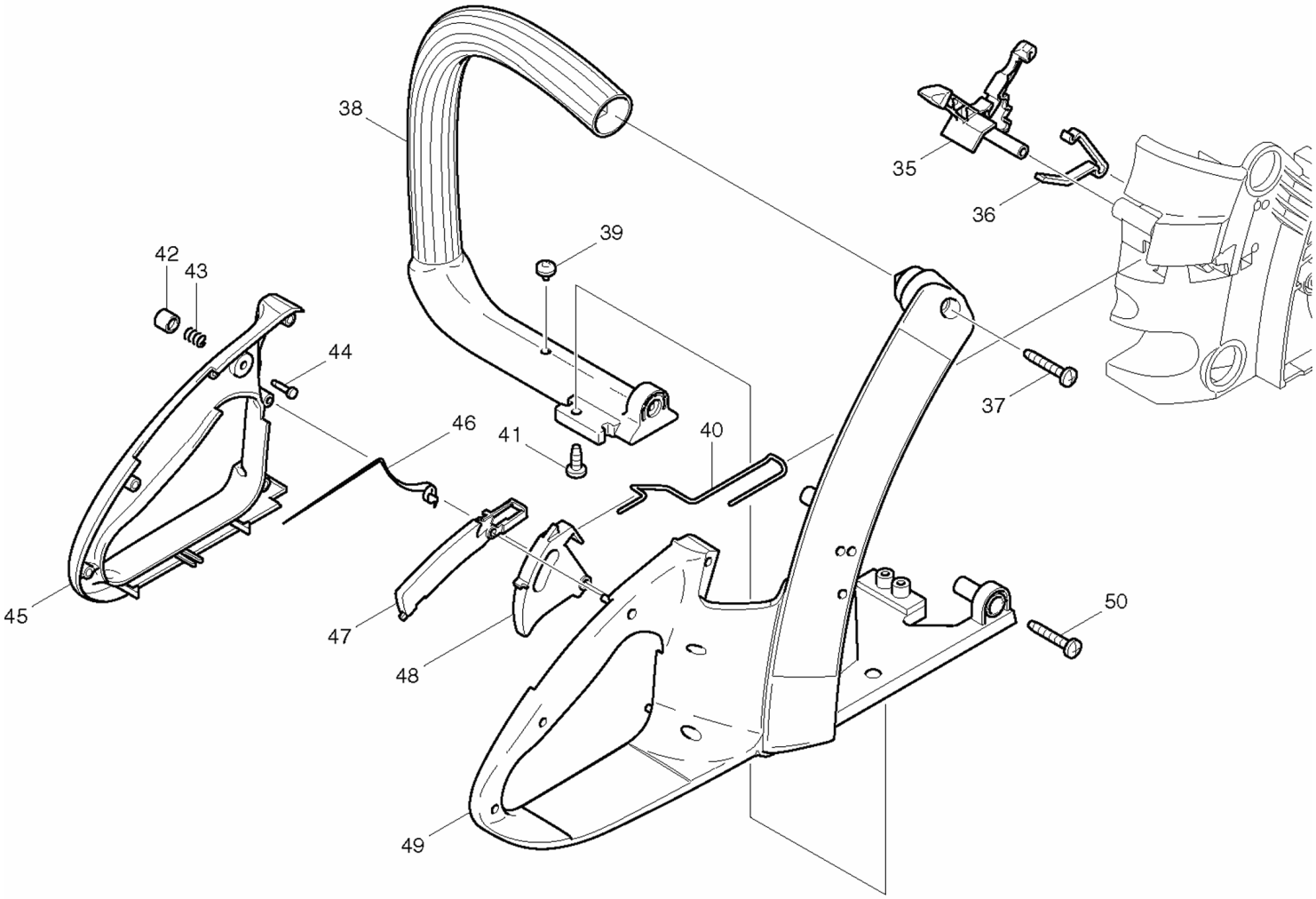
38
35
36
39
42
43
44
37
46
41
40
45
47
48
50
49

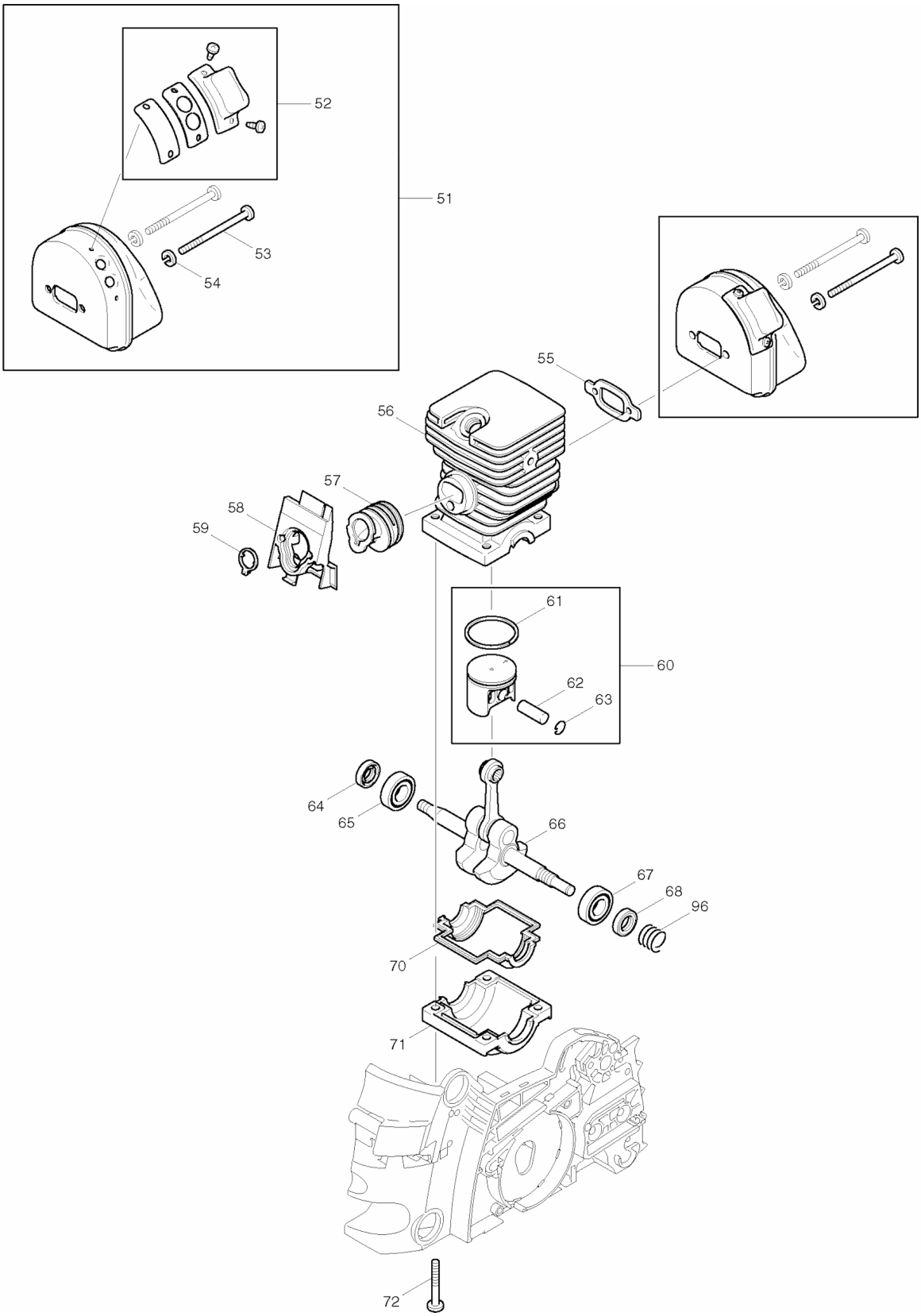
52
51
53
54
55
56
57
58
59
61
60
62
63
64
65
66
67
68
96
70
71
72

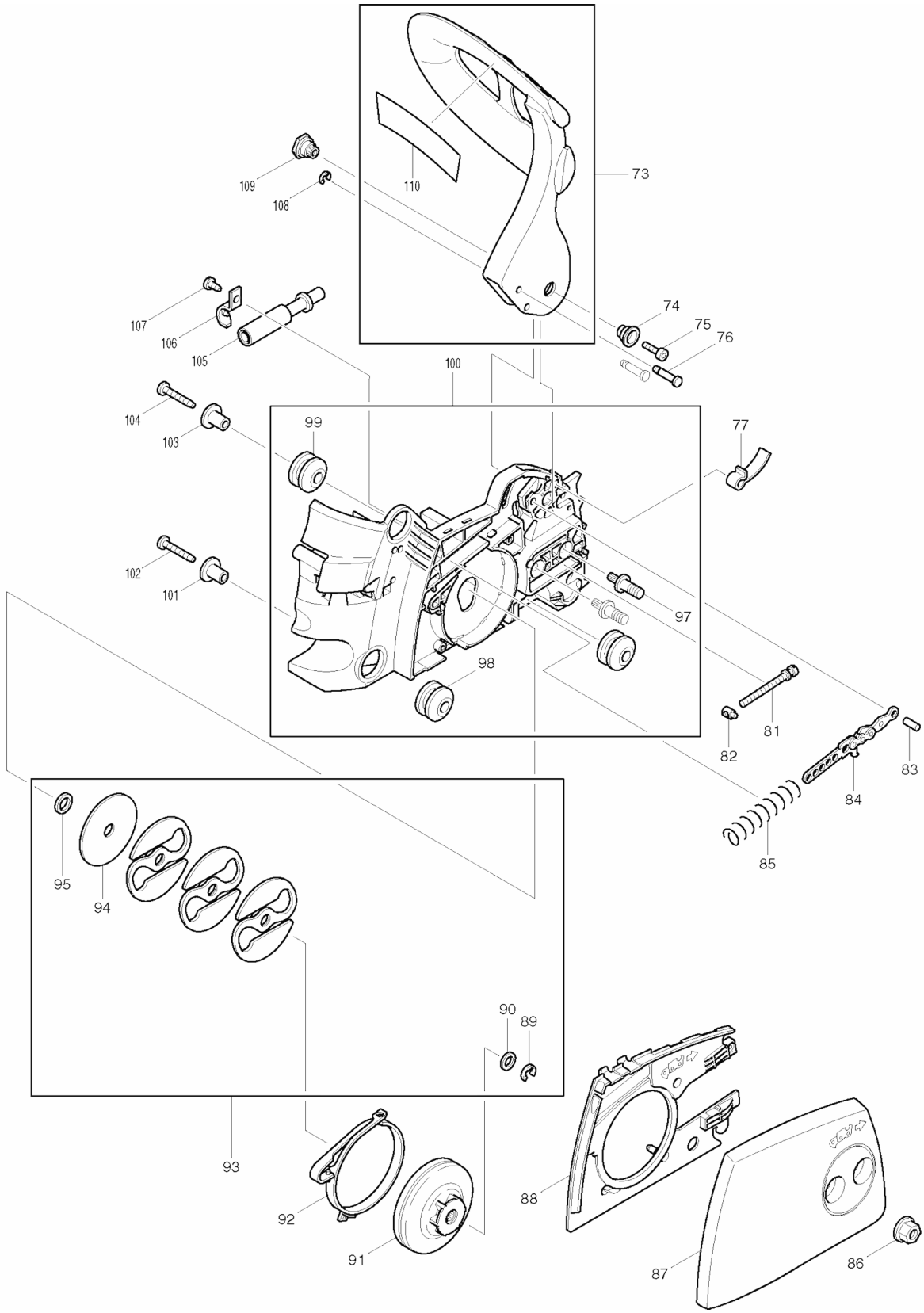
73
110
109
108
107
106
105
74
75
76
100
104
103
99
77
102
101
97
98
81
82
83
84
85
95
94
90
89
93
92
91
88
87
86

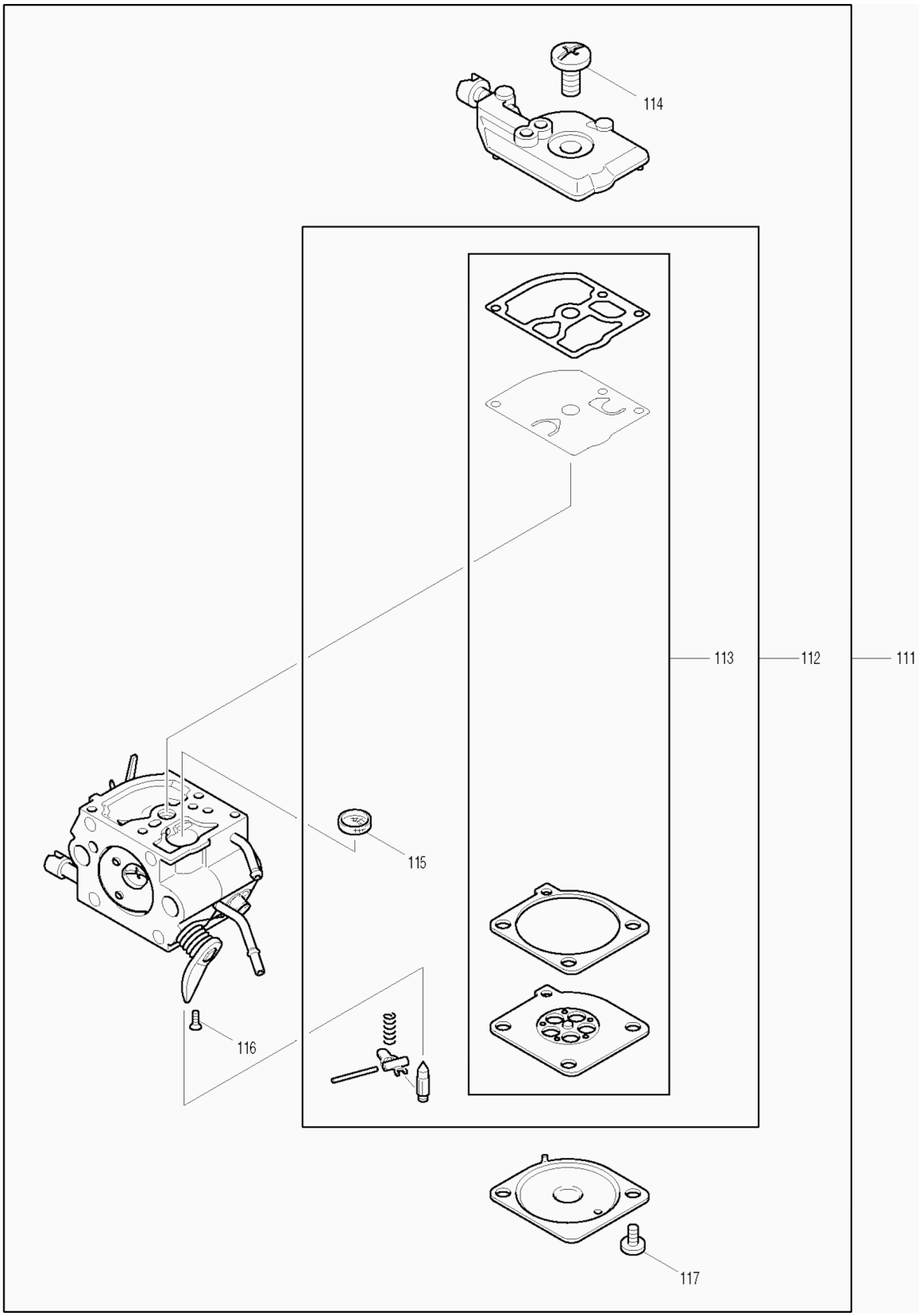
114
113
112
111
115
116
117

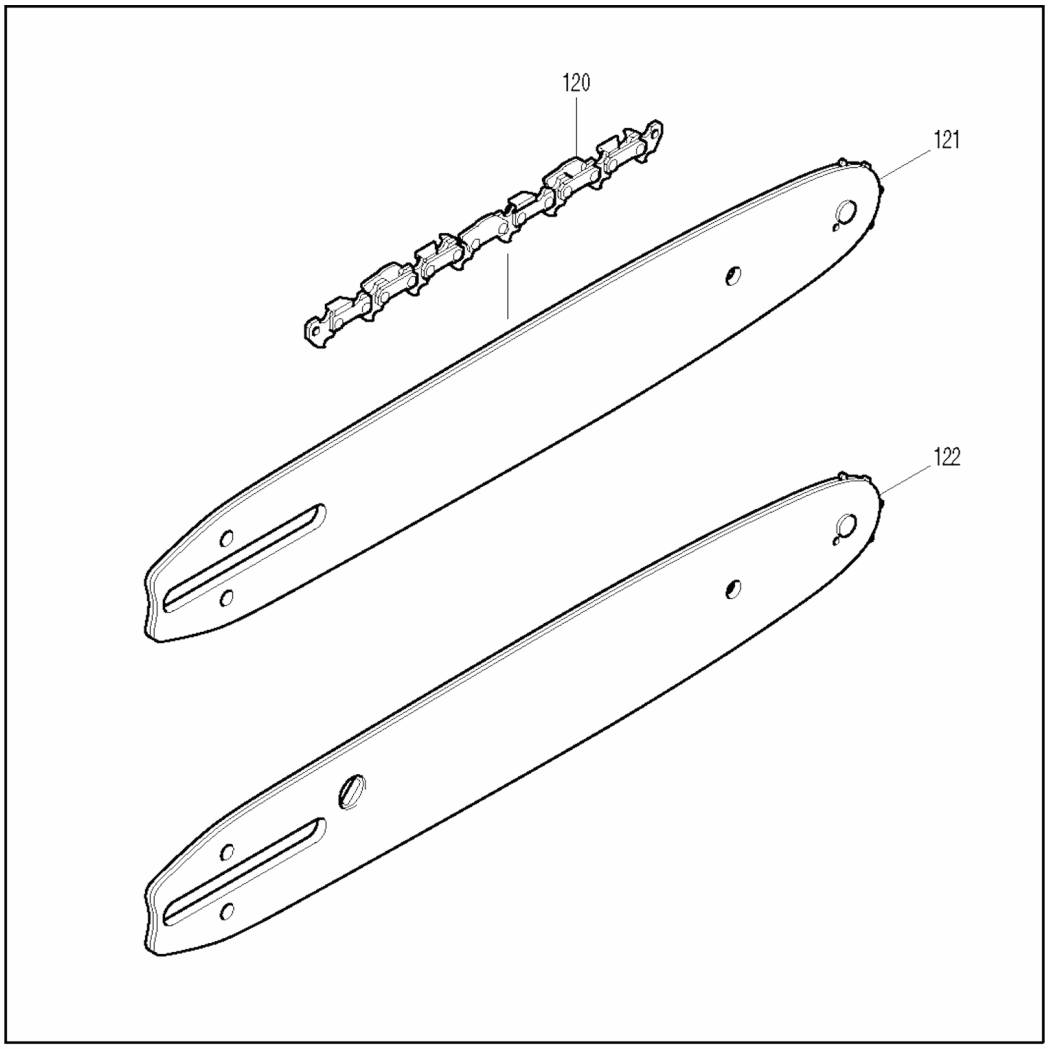
120
121
122

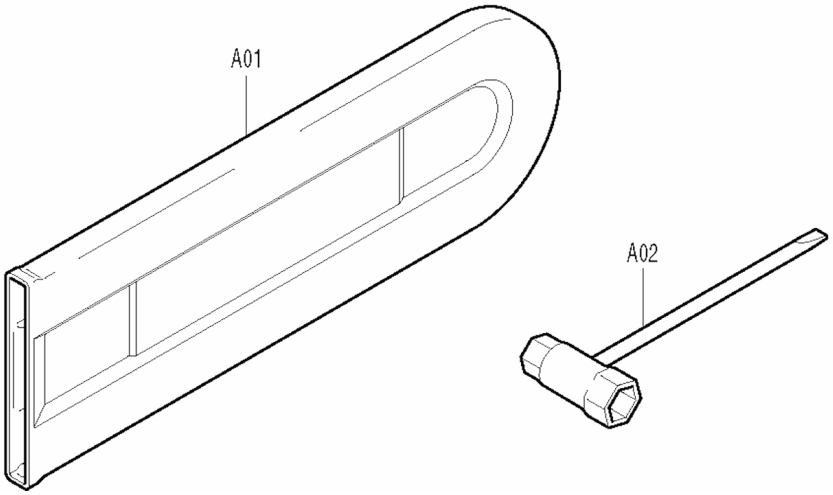
A01
A02

Products with multiple versions are listed in subsiding order with the newest version on top not indented

Fig #	Part ID	Part Name	Quantity
1	913650304	SCREW 5X30, DCS34	3
2	036118020	HOOD (GREY), DCS34	1
3	036173011	AIR FILTER, DCS34	1
4	923750340	NUT, DCS34	2
5	913650304	SCREW 5X30, DCS34	2
6	036171011	CONNECTING MUFF, DCS34	1
7	913650504	SCREW 5X50, DCS34	2
8	369155010	PRIMER, DCS34	1
9	965452060	VENTILATION LINE, DCS9000	1
10	965404980	FUEL LINE, DCS34	1
11	965603021	SPARK PLUG,WSR5F DPC6200	1
12	036140010	IGNITION ELECTRONIC CPL., DCS34	1
13	913340204	SCREW 4X20, DCS6401	2
14	970311490	SHORT-CIRCUIT CABLE, DCS34	1
15	920308024	HEX NUT M8X1, DCS34	1
16	926208001	SPRING WASHER 8, DPC7000	1
17	036141100	FLYWHEEL W/STARTER RATCH CPL.,DCS34	1
18	010114060	TANK PLUG CPL., DCS34	2
19	923750340	NUT, DCS34	1
20	913650304	SCREW 5X30, DCS34	4
21	963601380	SUCTION HEAD, DCS34	1
22	036112630	COVER, DCS34	1
23	965404031	STARTER GRIP, DCS34	1
24	965403490	RUBBER BUFFER, DCS341	1
25	036163010	REWIND SPRING. DCS34	1
26	985000155	STARTER ROPE 100 METER,DCS34	1
27	036162010	CABLE DRUM, DCS34	1
28	924805310	DISC (WASHER), DCS34	1
29	913650154	SCREW 5X15, DCS34	1
30	036112650	STARTER CPL., DCS34	1
31	036114100	OIL TANK CPL., DCS34	1
32	965402490	SUCTION LINE ASSY FOR OIL, DCS34	1
33	965404220	VENT VALVE, DCS330S,430	1
34	036114150	FUEL TANK CPL., DCS34	1
35	036155020	CHOKE LEVER, DCS34	1
36	036155031	CONTACT SPRING, DCS34	1
37	913650304	SCREW 5X30, DCS34	1
38	036310010	TUBULAR HANDLE, DCS34	1
39	965402360	RUBBER BUFFER, DPC7000	1
40	036117020	THROTTLE LINKAGE, DCS34	1
41	913650154	SCREW 5X15, DCS34	1
42	965451750	BUTTON, DCS6000I21	1
43	965551160	PRESSURE SPRING, DCS6000I21	1
44	965551150	STOP PIN, DCS6000I21	1
45	036117660	HANDLE HALF, DCS34	1
46	036117050	SPRING,DCS34	1
47	036117040	CATCH LEVER, DCS34	1
48	036117030	THROTTLE LEVER, DCS34	1
49	036117610	HANDLE HALF, DCS34	1
50	913650304	SCREW 5X30, DCS34	1
51	036174110	SPARK ARREST. MUFFLER ASSY., DCS34	1
52	036174200	SPARK ARRESTER SCREEN CPL., DCS34	1
53	913350654	SCREW 5X65, DCS34	2
54	928405000	WASHER, DCS340	2
55	965522033	N/A	1
	965522032	GASKET, DCS5200I	
56	036131011	CYLINDER, DCS34	1
57	036131020	SUCTION HOSE, DCS34	1

58	036171020	CLAMP, DCS34	1
59	036131030	INSERT FOR SUCTION HOSE, DCS34	1
60	021132110	PISTON ASS'Y, DCS34	1
61	021132030	PISTON RING, DS340	1
62	021132020	PISTON PIN, DCS340	1
63	108132050	SPRING RING, DCS34	1
64	962900057	RADIAL RING, DCS34	1
65	960102129	BALL BEARING, DCS431	1
66	036120010	CRANKSHAFT ASSY., DCS34	1
67	960102129	BALL BEARING, DCS431	1
68	962900057	RADIAL RING, DCS34	1
70	965531010	GASKET, DCS34	1
71	036111010	CRANKCASE LOWER PART, DCS34	1
72	913350404	SCREW 5X40/20, DCS34	4
73	036213120	HAND GUARD CPL., DCS34	1
74	036213070	BUSH, DCS34	1
75	908005165	HEAD SCREW M5X16, DCS340	1
76	934150200	BOLT 5X22, DCS34	2
77	036213030	SPRING, DCS34	1
81	036213090	STRAINING SCREW, DCS34	1
82	001213042	NUT WITH PIVOT, DCS341	1
83	962650128	CYLINDRICAL PIN, DCS34	1
84	036213020	BREAK SPRING HOLDER CPL., DCS34	1
85	028213200	SPRING, DCS34,T2	1
86	923208004	HEX NUT, DCS341	2
87	036213650	SPROCKET GUARD CPL., DCS34	1
88	036213040	COVER PLATE, DCS34	1
89	927306000	SAFETY WASHER , DCS34	1
90	900006065	SPACER, DCS6800I	1
91	036223110	CLUTCH DRUM CPL 3/8, DCS34	1
92	028213501	BRAKE SPRING, DCS34	1
93	036114020	FIXING BUSH, DCS34	1
94	027182030	STOP DISC, DCS5200I	1
95	036224010	WASHER 10/16X2.5, DCS34	1
96	036245020	WORM, DCS34	1
97	036110020	BOLT, DCS34	1
98	965403490	RUBBER BUFFER, DCS341	2
99	965403490	RUBBER BUFFER, DCS341	1
100	036110600	MOTOR HOUSING CPL., DCS34	1
101	036114020	FIXING BUSH, DCS34	1
102	913650304	SCREW 5X30, DCS34	1
103	036114020	FIXING BUSH, DCS34	1
104	913650304	SCREW 5X30, DCS34	1
105	021245003	OIL PUMP CPL.,UC3500, UC4000	1
106	203245001	OIL PUMP HOLDER, UC3500, UC4000	1
107	913335060	SCREW 3.5X6.5, DCS34	1
108	927304000	SAFETY WASHER , DCS431	1
109	036213081	BUSH, DCS34	1
110	980114674	LABEL, DCS34	2
111	036153150	CARBURETOR COMPLETE, DCS34	1
112	036153100	REPAIR KIT, DCS34	1
113	036153110	GASKET-DIAPHRAGM KIT, DCS34	1
114	036153080	SCREW, DCS34	1
115	036153040	SCREEN, DCS34	1
116	036153120	SCREW, DCS34	1
117	001153020	SCREW, DCS460	2
	528092652	14 CHAIN, DCS34 & UC3530A	
	528092656	16 SAW CHAIN, UC4000	
	442040661	16 GUIDE BAR, DCS34-16	
	442035661	GUIDE BAR 14, DCS34 & UC3530A	
	442040061	SPROCKET NOSE BAR 16,DCS34	

442035061	SPROCKET NOSE BAR 14, DCS34	
952100633	CHAIN PROTECT COVER, DCS340	1
941719131	UNIVERSAL WRENCH, DCS6401	1