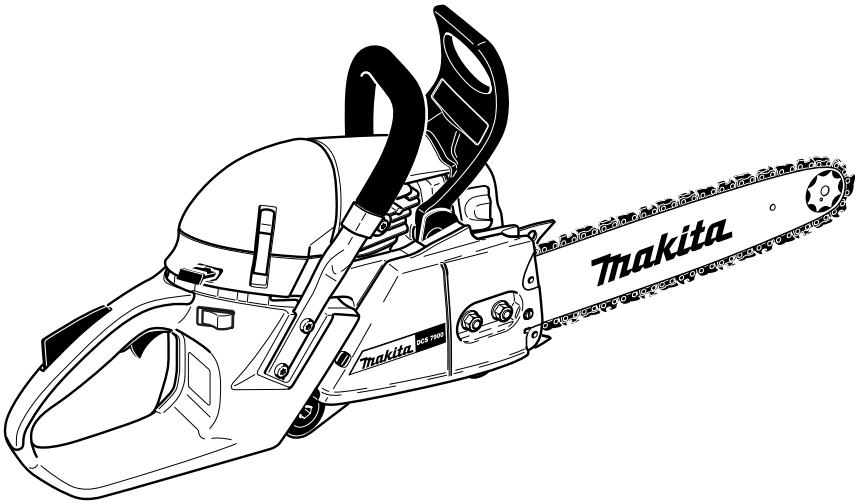

CONTENTS:

1) Fuel tank, Tubular grip
2) Hood, Air filter, Muffler
3) Cylinder, Crankcase
4) Ignition electronics, Starter
5) Oil pump, Clutch
6) Chain brake
7) Carburetor
8) Accessories

1) FUEL TANK, TUBULAR GRIP

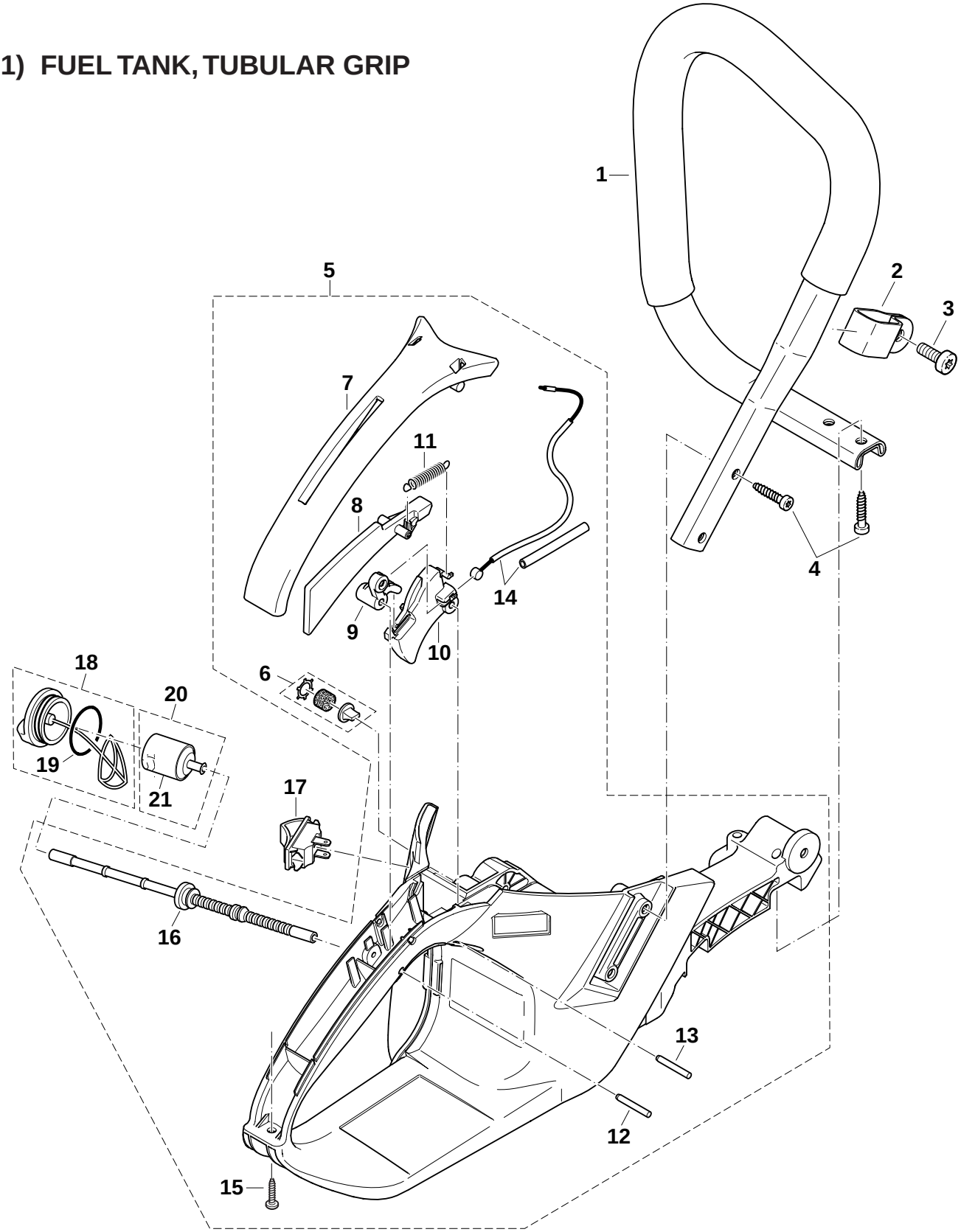

2) HOOD, AIR FILTER, MUFFLER

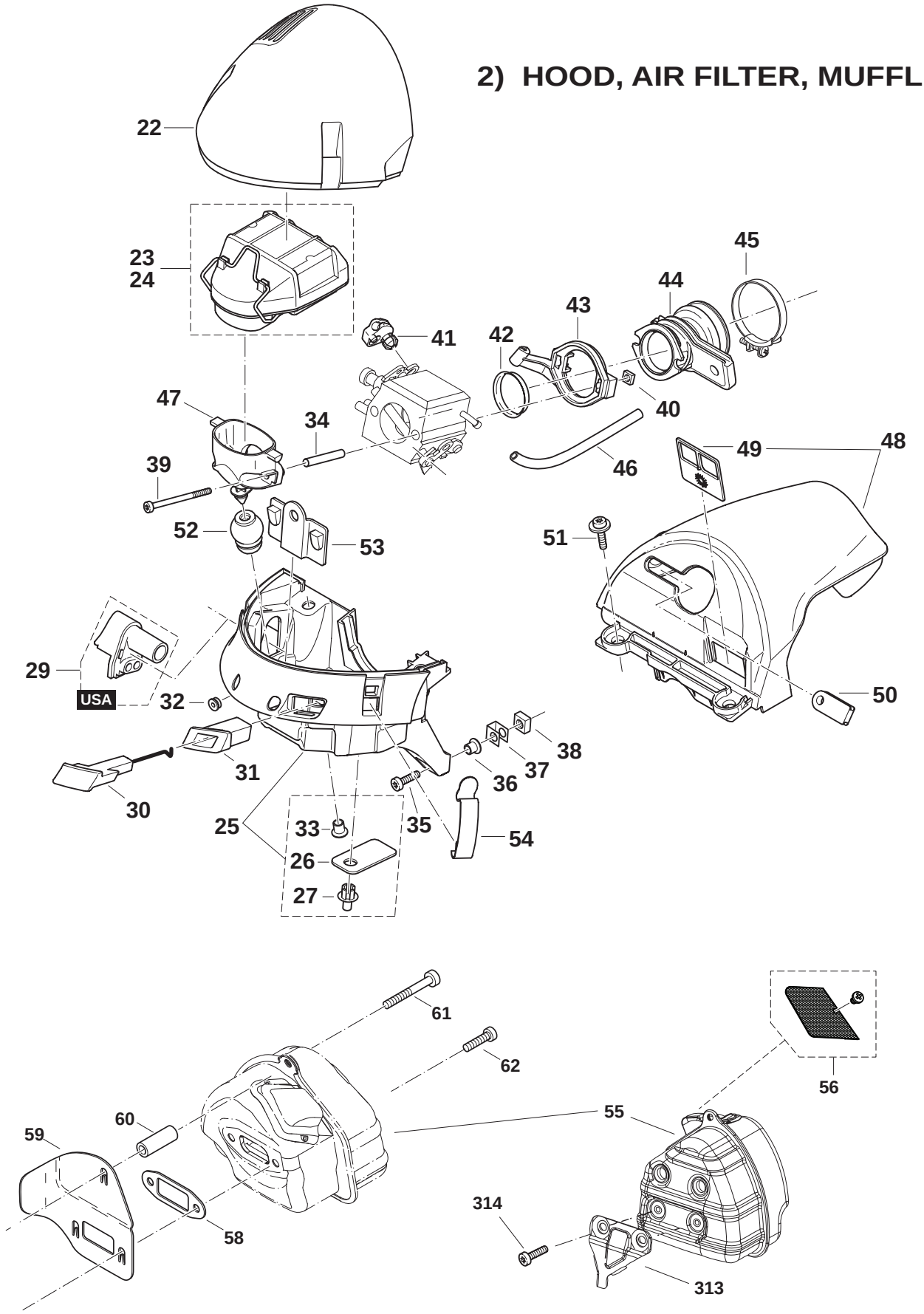

3) CYLINDER, CRANKCASE

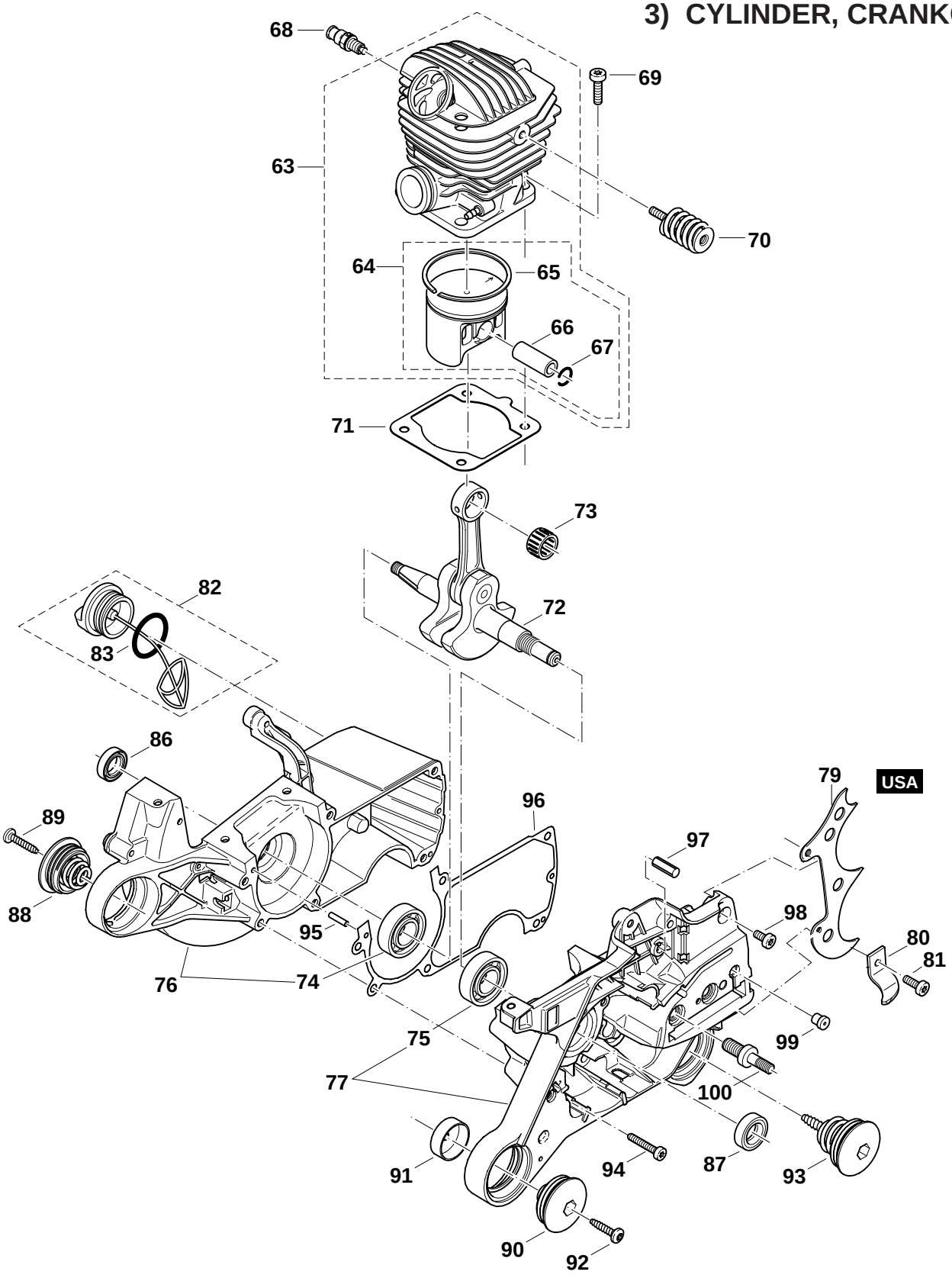

4) IGNITION ELECTRONICS, STARTER

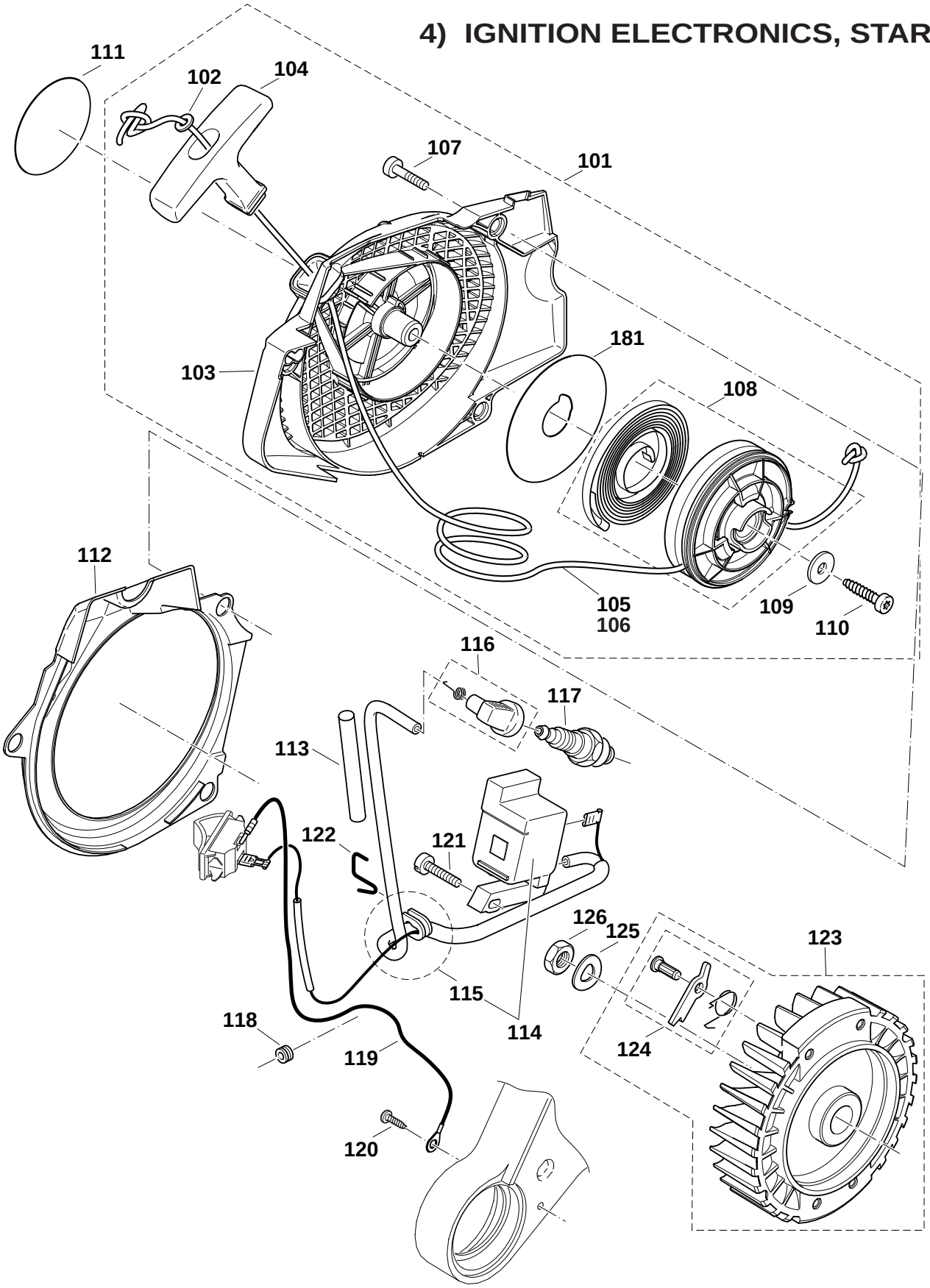

5) OIL PUMP, CLUTCH

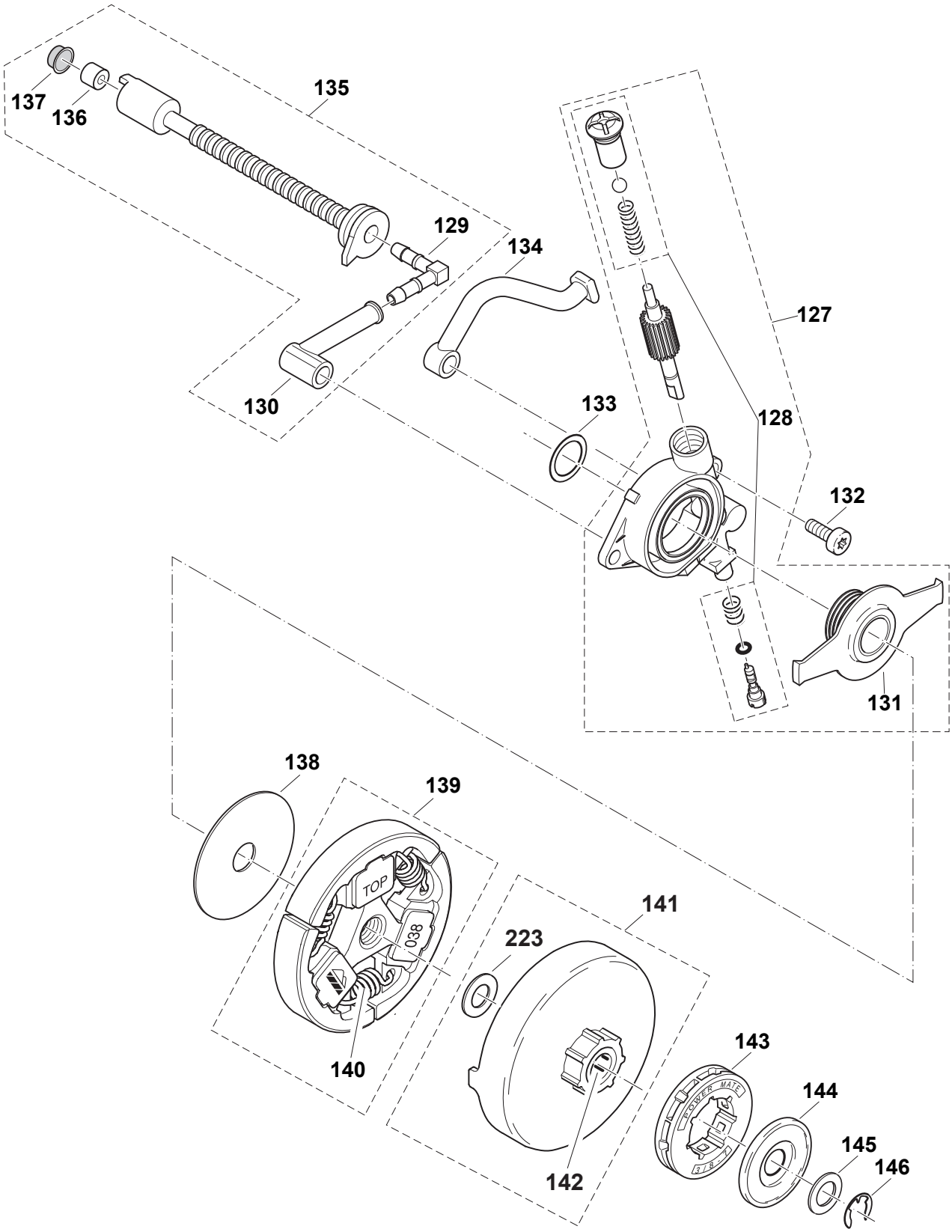

6) CHAIN BRAKE

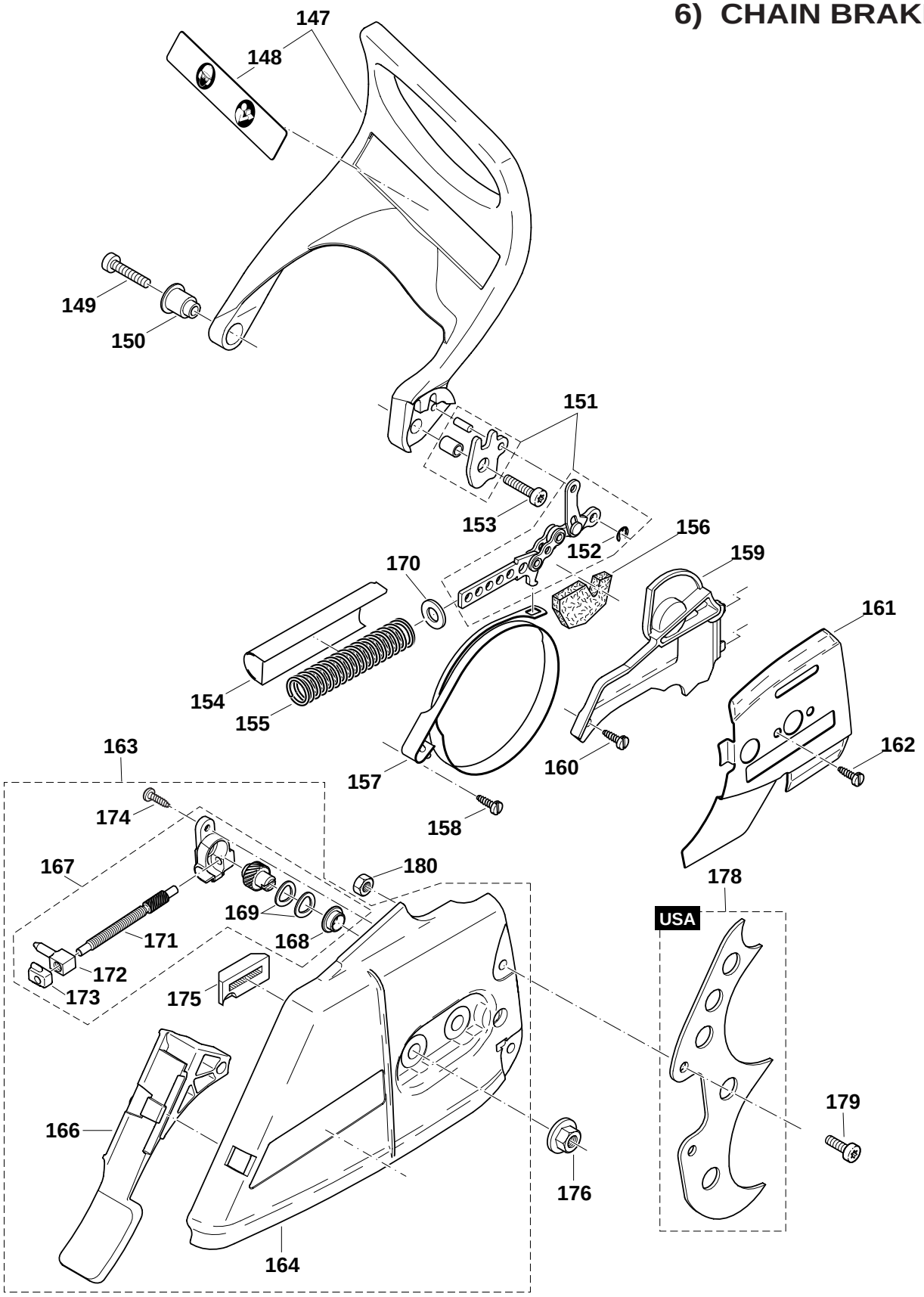

7) CARBURETOR

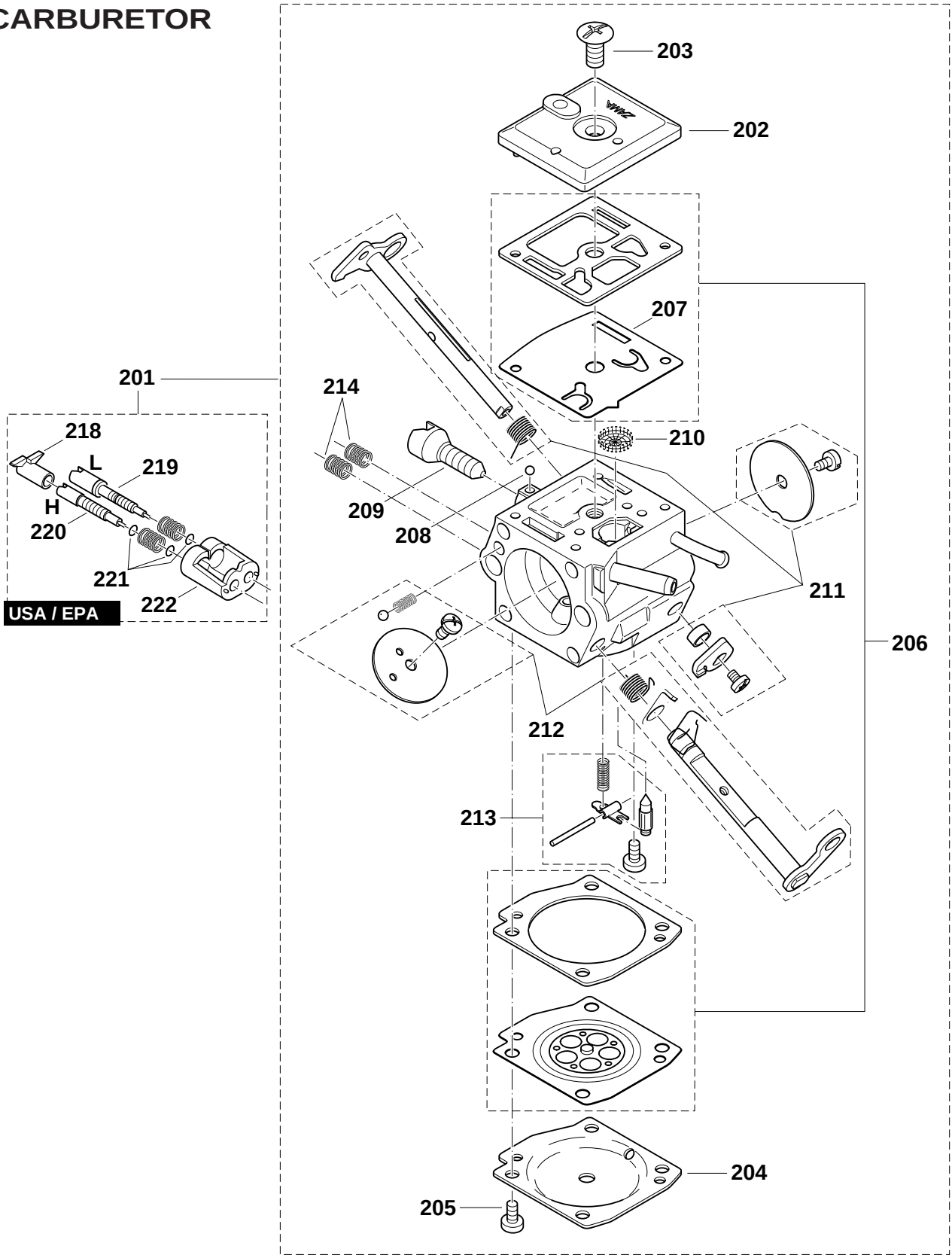

8) ACCESSORIES

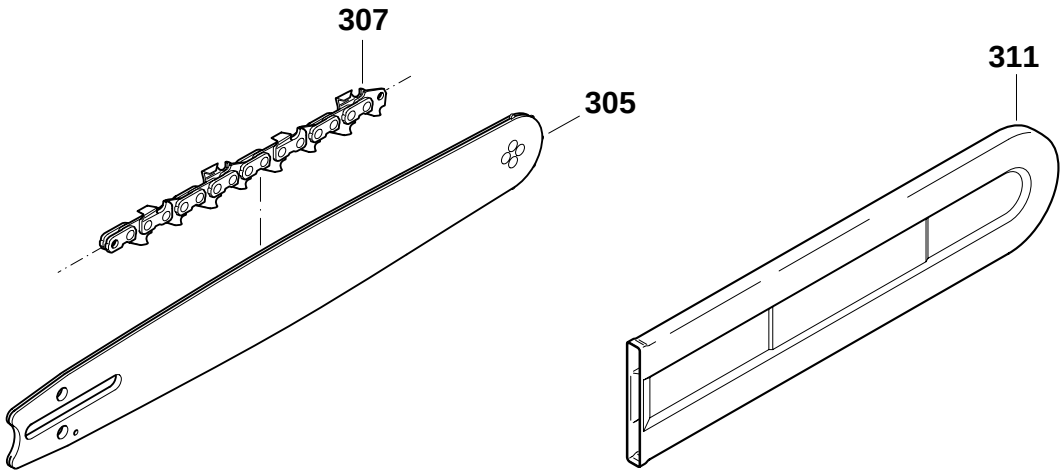

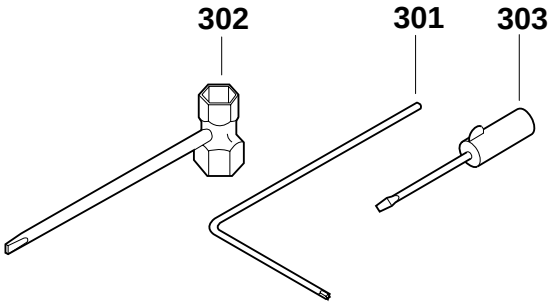

Products with multiple versions are listed in subsiding order with the newest version on top not indented.

Corresponding bulletins are attached. Select bulletin name or attachment to view.

Tech Bulletin	Fig. No.	Part No.	Description	Q'ty Unit	Notes
	1	038-310-020	TUBULAR HANDLE ASSY	1	
	2	038-310-061	CLAMP, DCS6401	1	
	3	908-006-145	SCREW 6x14	1	
	4	913-455-204	SCREW 5.5x20	4	
	5	038-114-608	TANK CPL., DCS6401	1	
	6	957-114-061	AIR VALVE CPL, DCS6401	1	
	7	038-114-631	GRIP PLATE BLUE	1	
	7	038-114-630	GRIP PLATE, blue	1	
	8	038-117-020	CATCH LEVER	1	
	9	038-117-030	ROCKER	1	
	10	038-117-010	THROTTLE LEVER	1	
	11	038-117-050	SPRING	1	
	12	935-930-240	CYLINDRICAL PIN 3x24	1	
	13	935-930-280	CYLINDRICAL PIN 3x28	1	
	14	038-117-041	BOWDEN CABLE, DCS6421	1	
	14	010-117-040	BOWDEN CABLE	1	
	15	913-340-204	SCREW 4x20 S27	1	
	16	038-114-051	FUEL LINE, DCS6401	1	
	17	975-001-241	SHORT CIRCUIT SWITCH, DCS6401	1	
	18	010-114-050	TANK CAP cpl.	1	
	19	963-228-030	PACKING RING 28x3	1	
	20	963-601-122	SUCTION HEAD CPL., DPC7321	1	
	21	963-601-240	FELT for SUCTION HEAD	1	
	22	038-118-622	COVER GREY, DCS6401	1	
	23	038-173-101	AIR FILTER CPL., DCS6401	1	
	24	038-173-011	AIR FILTER COMPLETE, NYLON, DCS6401	1	
	25	038-118-670	BOTTOM BLUE, DCS6401	1	
	25	038-118-630	BOTTOM, blue	1	
	26	038-118-110	RUBBER FLAP	2	
	27	938-650-062	RIVET	2	
	29	038-118-081	ADJUSTING GUIDE, DCS6421	1	
	29	038-118-120	ADJUSTING GUIDE	1	
	30	038-155-052	CHOKE LINKAGE, DCS6401	1	
	30	038-155-051	CHOKE SHAFT, DCS6401	1	
	31	038-155-020	CHOKE GUIDE	1	
	32	965-401-020	RUBBER BUSH	1	
	33	001-118-100	BUSHING	2	
	34	038-155-060	SPACER L=30MM	2	
	35	908-005-205	SCREW 5x20	2	
	36	001-118-100	BUSHING	2	
	37	038-111-050	CLIP	2	
	38	038-111-060	SQUARE NUT M5	2	
	39	908-204-555	SCREW 4x55	2	
	40	921-804-004	SQUARE NUT M4	2	
	41	038-155-012	RETAINING CLIP, DCS6401	1	
	42	038-131-031	INSERT FOR SUCTION HOSE, DCS6401	1	
	43	038-171-041	FLANGE	1	
	44	038-131-011	SUCTION HOSE, DCS6401	1	
	45	965-603-050	HOSE CLAMP	1	
	46	965-452-382	TUBE,	1	
	46	965-452-380	TUBE,L=65	1	
	47	038-171-011	CONNECTING MUFF, DCS7901	1	

Products with multiple versions are listed in subsiding order with the newest version on top not indented.

Corresponding bulletins are attached. Select bulletin name or attachment to view.

Tech Bulletin	Fig. No.	Part No.	Description	Q'ty Unit	Notes
	48	038-118-690	HOOD cpl., grey	1	
	49	038-118-140	INSERT	1	
	50	038-118-130	CABLE GUIDE	1	
	51	917-105-205	SCREW M5x20	2	
	52	038-171-030	HOLDER	1	
	53	038-118-100	PLUG	1	
	54	038-118-071	STEEL CLIP	2	
	55	038-174-300	MUFFLER	1	
	56	038-174-910	SPARK ARRESTOR SCREEN	1	
	58	965-531-131	GASKET, DPC8112	1	
	59	038-174-021	COVER PLATE, DCS6401	1	
	60	038-174-030	CONNECTING LINK	1	
	61	908-305-405	SCREW M5x40	1	
	62	908-405-205	SCREW M5x20	2	
	63	040-130-034	CYLINDER PISTON CPL., DCS6421	1	
	63	040-130-033	CYLINDER/PISTON CPL., DCS6401	1	
	64	325-132-033	PISTON CPL. (47), DPC6410	1	
	65	325-132-050	PISTON RING (D=47)	1	
	66	119-132-030	PISTON PIN	1	
	67	119-132-060	SPRING RING C12x1	2	
	68	001-131-150	DECOMPRESSION VALVE	1	
	69	908-805-235	SCREW W/SPRING WASHER, DPC7331	4	
	70	038-114-152	SPRING W/THREADED INSERT, DCS6401	1	
	71	965-531-160	GASKET, DPC6410	1	
	72	038-120-021	CRANKSHAFT, DCS6401	1	
	73	962-210-121	NEEDLE CAGE, DCS6421	1	
	73	962-210-019	NEEDLE CAGE	1	
	74	960-102-159	BALL BEARING 6202	1	
	75	960-102-179	BALL BEARING 6203 C4	1	
	76	038-111-660	CRANKCASE MAG.SIDE-BLUE, DCS6401	1	
	77	038-111-641	CRANKCASE CLUTCH SIDE,BLUE, DCS6401	1	
	79	038-250-201	SPIKE BAR (CRANKCASE), DCS6401	1	
	80	038-111-171	CHAIN CATCH, DCS6401	1	
	81	908-005-165	SCREW 5x16	1	
	82	010-114-050	TANK CAP cpl.	1	
	83	963-228-030	PACKING RING 28x3	1	
	86	962-900-052	RADIAL RING	1	
	87	962-900-061	RADIAL RING 17x28x5/4	1	
	88	038-114-130	SPRING cpl.,w/cap	1	
	89	913-455-204	SCREW 5.5x20	1	
	90	038-114-130	SPRING cpl.,w/cap	1	
	91	038-114-191	POT, DCS6401	1	
	91	038-114-190	POT	1	
	92	913-455-204	SCREW	1	
	93	038-114-141	SPRING, DCS6401	1	
	94	908-005-305	SCREW 5x30	6	
	95	936-430-160	SPIRAL CLAMPING PIN 3x16	2	
	96	038-111-042	GASKET	1	
	97	934-660-250	SLOTTED PIN 6x24	1	
	98	908-005-125	SCREW 5X12	1	
	99	010-245-030	VENT VALVE	1	
	100	038-232-010	BOLT	2	

Products with multiple versions are listed in subsiding order with the newest version on top not indented.

Corresponding bulletins are attached. Select bulletin name or attachment to view.

Tech Bulletin	Fig. No.	Part No.	Description	Q'ty Unit	Notes
	101	038-160-610	STARTER ASS'Y. BLUE, DCS6421	1	
	101	038-160-604	STARTER ASS'Y., DCS6401	1	
	102	928-405-000	SPRING WASHER	1	
	103	038-112-630	FAN HOUSING, blue	1	
	104	001-161-020	STARTER GRIP, DPC6410	1	
	105	108-164-020	STARTER ROPE,(L=980MM)	1	
	106	985-000-155	STARTER ROPE, (L=100M)	1	
	107	908-605-205	SCREW M5x20	3	
	108	038-162-024	CABLE DRUM, DCS6401	1	
	109	924-605-510	WASHER 5.5x18x1.6	1	
	110	913-455-204	SCREW 5.5x20	1	
	111	980-115-539	LABEL, DCS6421	1	
	112	038-112-020	AIR DUCT	1	
	113	970-502-110	INSULATING HOSE,L=140	1	
	114	038-143-041	IGNITION COIL RED, DCS6401H	1	
	115	038-143-030	CABLE HARNESS	1	
	116	957-604-240	PLUG CAP	1	
	117	965-603-021	SPARK PLUG	1	
	118	965-401-011	RUBBER BUSH	1	
	119	970-311-540	EARTH CABLE	1	
	120	915-135-100	SCREW BZ3.5x9.5	1	
	121	908-304-205	SCREW 4x10x20 S27	2	
	122	038-111-110	CLIP	2	
	123	010-038-141	FLYWHEEL/IGNITION COIL KIT, DCS6401	1	
	123	038-141-000	FLYWHEEL ASSY.	1	
	124	108-166-051	STARTER RATCHET cpl.	2	
	125	926-208-001	SPRING WASHER	1	
	126	920-208-024	HEXAGONAL NUT M8x1	1	
	127	038-245-011	OIL PUMP CPL., DCS6401	1	
	128	030-245-070	REPAIR KIT	1	
	129	001-245-140	ANGULAR NIPPLE	1	
	130	038-245-110	OIL LINE	1	
	131	038-245-031	PUMP DRIVE, DCS6401	1	
	132	908-005-125	SCREW 5x12	2	
	133	038-224-021	DISC, DCS6401	1	
	134	038-245-061	OIL LINE, DCS6401	1	
	135	038-245-020	SUCTION LINE OIL cpl.	1	
	136	900-005-066	DISTANCE RING	1	
	137	963-601-100	STRAINER SCREEN	1	
	138	001-182-042	GUIDE DISC, DCS6401	1	
	139	038-180-011	CLUTCH ASS'Y, DCS6401	1	
	140	024-184-021	SPRING	3	
	141	957-223-092	CLUTCH DRUM CPL., DCS6401	1	
	142	962-300-009	NEEDLE SLEEVER, DCS510	1	
	143	119-224-070	RIM SPROCKET, T=3/8"	1	
	144	181-224-081	DISC, DCS510	1	
	145	021-224-011	DISC, DCS340	1	
	146	927-408-000	WASHER, D=8x1.3	1	
	147	038-213-221	HAND GUARD CPL., DCS6401	1	
	148	980-114-237	LABEL	1	
	149	908-405-205	SCREW 5x20	1	
	150	038-213-160	BUSHING	1	

Products with multiple versions are listed in subsiding order with the newest version on top not indented.

Corresponding bulletins are attached. Select bulletin name or attachment to view.

Tech Bulletin	Fig. No.	Part No.	Description	Q'ty Unit	Notes
	151	957-213-030	BRAKING MECHANISM	1	
	152	927-304-000	WASHER 4	1	
	153	908-005-206	SCREW 5x20	1	
	154	038-213-152	POT, DCS6421	1	
	154	038-213-150	POT	1	
	155	038-213-130	SPRING	1	
	156	038-213-200	FOAM SPONGE	1	
	157	038-213-010	BRAKE SPRING	1	
	158	915-135-100	SCREW BZ3.5x9.5	1	
	159	038-213-040	PLATE	1	
	160	915-135-100	SCREW BZ3.5x9.5	1	
	161	038-111-030	GUIDE PLATE	1	
	162	915-135-100	SCREW BZ3.5x9.5	1	
	163	038-213-641	SPROCKET GUARD CPL., DCS6401	1	
	164	038-213-635	SPROCKET GUARD, blue	1	
	166	038-213-190	CHIP GUIDE	1	
	167	957-213-023	CHAIN TENSIONER, DCS6401	1	
	168	038-213-080	BUSHING	1	
	169	038-213-210	SPRING WASHER	2	
	170	028-213-011	WASHER, DCS6421	1	
	170	028-213-010	WASHER 12x9	1	
	171	957-213-040	TENSIONING SCREW, DCS6401	1	
	172	038-213-091	SQUARE NUT, DCS6401	1	
	173	038-213-070	TENSIONING SCREW BEARING	1	
	174	915-135-100	SCREW BZ3.5x9.5	1	
	175	024-213-240	CHAIN GUIDE	1	
	176	923-208-004	HEX. NUT M8	2	
	178	038-250-211	SPIKE BAR, DCS6401	1	
	179	908-005-125	SCREW M5x12	2	
	180	920-405-000	HEX. NUT M5	2	
	181	038-162-050	SPACER	1	
	201	038-153-500	CARBURETOR CPL., , DCS6421	1	
	201	038-153-023	CARBURETOR, DCS6401	1	
	202	038-153-030	PUMP COVER	1	
	203	038-153-360	SCREW	1	
	204	038-153-040	DIAPHRAGM COVER	1	
	205	001-153-020	SCREW	4	
	206	038-153-410	DIAPHRAGM/GASKETS SET, DCS6401	1	
	207	038-153-070	PUMP DIAPHRAGM	1	
	208	038-153-210	LOCKING BALL	1	
	209	038-153-220	IDLE STOP SCREW (S)	1	
	210	036-153-040	SCREEN, DCS34	1	
	211	957-153-061	THROTTLE SHAFT KIT, DCS6401	1	
	212	957-153-051	CHOKE SHAFT KIT, DCS6401	1	
	213	957-153-070	CONTROL PARTS, DCS6401	1	
	214	038-153-260	SPRING	2	
	218	038-153-310	LIMITER CAP	1	
	219	038-153-290	IDLE ADJUSTM. SCREW-L	1	
	220	038-153-300	MAIN ADJUSTM. SCREW-H	1	
	221	038-153-250	WASHER	3	
	222	038-153-320	ADJUSTING GUIDE	1	
	223	900-007-010	WASHER, DCS6401	1	

Products with multiple versions are listed in subsiding order with the newest version on top not indented.

Corresponding bulletins are attached. Select bulletin name or attachment to view.

Tech Bulletin	Fig. No.	Part No.	Description	Q'ty Unit	Notes
	301	940-827-000	ANGLED SCREW DRIVER	1	
	302	941-719-131	UNIVERSAL WRENCH	1	
	303	944-340-001	SCREW DRIVER	1	
	305	445-050-665	20" GUIDE BAR .050, 3/8"	1	
	307	523-102-072A	20" CHAIN , .050-3/8,DCS6401-20	1	
	311	952-100-653	CHAIN PROTECTION,20-24"	1	
	313	038-174-400	CARRIER FOR CATALYST	1	
	314	908-005-095	SCREW M5X9, DCS5200I	2	