PARTS BREAKDOWN

rev 0_08/02/2010

UB1101

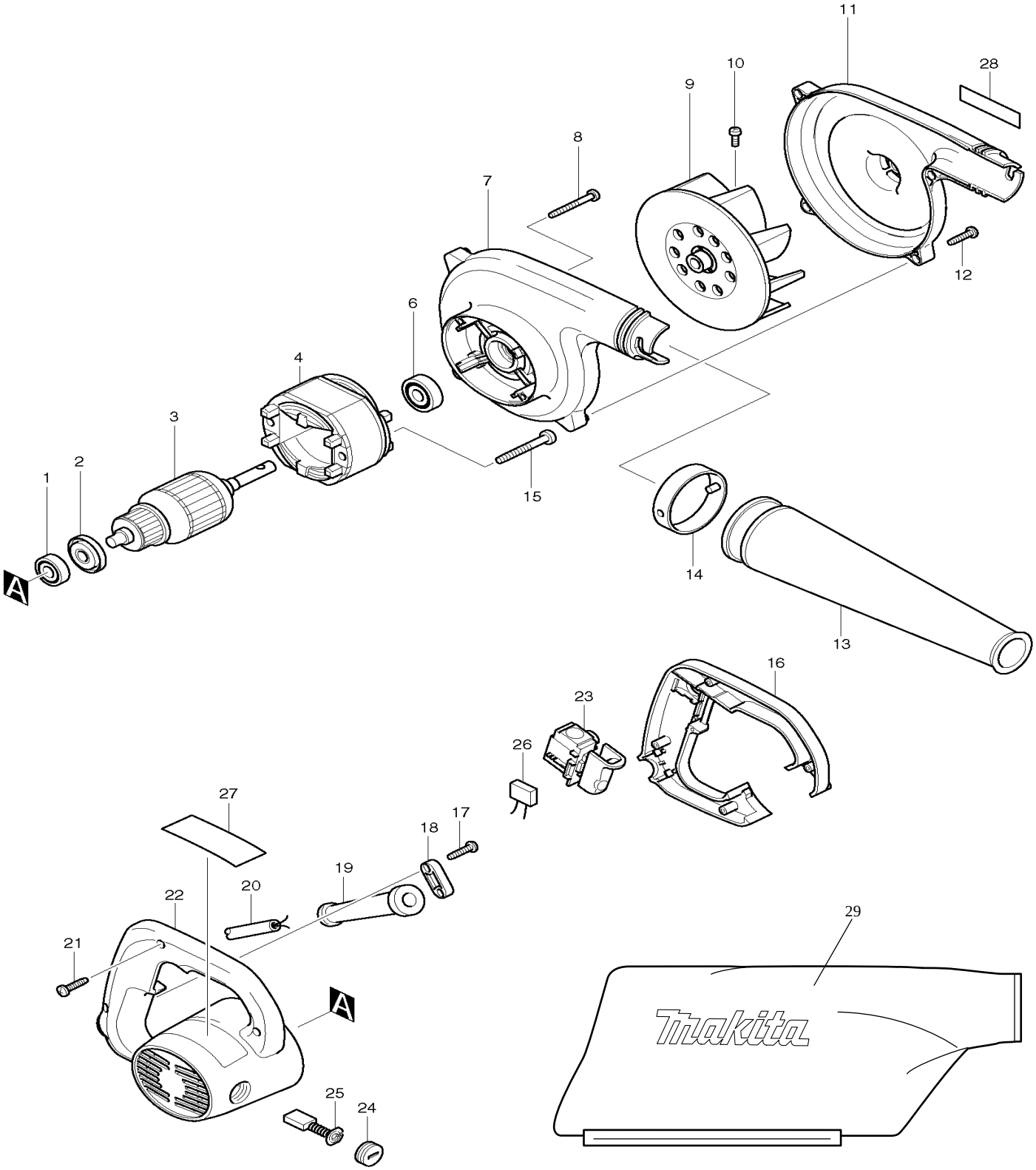

Products with multiple versions are listed in subsiding order with the newest version on top not indented.

Corresponding bulletins are attached. Select bulletin name or attachment to view.

Tech Bulletins	Fig. No	Part No.	Description	Q'ty Unit
	1	210005-4	BALL BEARING 608DDW, 9031	1
	2	681644-1	INSULATED WASHER, 9227C	1
	3	516476-6	ARMATURE ASS'Y 115V, UB1101	1
	4	594436-8	FIELD ASS'Y 115V, UB1101	1
	6	211092-6	B. BEARING 629DDW, BO4530	1
	7	152902-7	FAN HOUSING CPL.	1
	8	266053-1	P.T. SCREW 4X35, 4304	4
	9	241888-1	FAN, 4014NV	1
	10	911117-3	P.H. SCREW M4X12, 4014NV	1
	11	183389-2	FAN COVER,UB1101	1
	12	265995-6	TAPPING SCREW 4X18, 4323K	4
	13	132025-7	NOZZLE ASS'Y 4014NV, 4014B, (T2)	1
	14	414145-2	CONNECTOR, 4014NV, 4014B (T2)	1
	15	266211-9	TAPPING SCREW 5X40, HK0500	2
	16	417657-4	HANDLE COVER, UB1101	1
	17	265995-6	TAPPING SCREW 4X18, 4323K	2
	18	687063-9	STRAIN RELIEF, 4323K	1
	19	682502-4	CORD GUARD 8-85, HP1621F	1
	20	664064-4	CORD (2X18X8 SJ), HR2400	1
	20	664891-9	CORD	1
	21	265995-6	TAPPING SCREW 4X18, 4323K	4
	22	152903-5	MOTOR HOUSING CPL.	1
	23	651298-8	SWITCH, SINGLE W/LOCK	1
	24	643755-0	BRUSH HOLDER CAP, JR3020	2
	25	CB303	CARBON BRUSH SET, 194996-6	1
	25	191963-2	CARBON BRUSH CB-303 SET, 9227C	1
	27	853405-1	NAME PLATE, UB1101	1
	28	819063-3	MAKITA LABEL, 6992DWDE	1
	29	122814-8	DUST BAG, BUB182	1
	29	122321-1	DUST BAG, UB1101	1