Parts Breakdown LXDT01

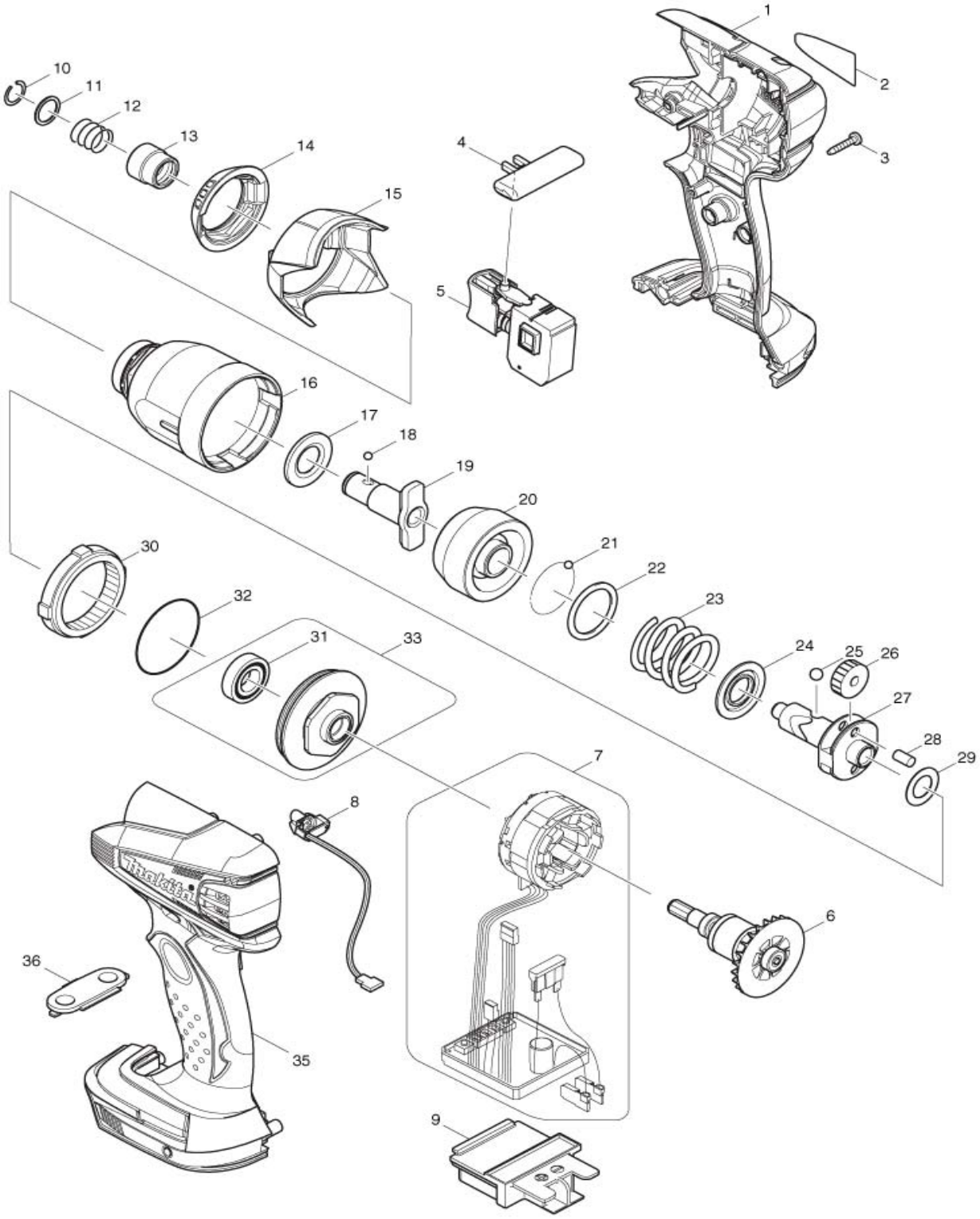

Parts Breakdown LXDT01

Products with multiple versions are listed in subsiding order with the newest version on top not indented

Fig. #	Part ID	Part Name	Quantity
1	188922-5	HOUSING SET	1
1	263005-3	RUBBER PIN 6	2
1		INC. 35	0
2	868514-3	LXDT01 NAME PLATE	1
3	266130-9	TAPPING SCREW BIND PT 3X16	9
4	419041-9	F/R CHANGE LEVER	1
5	650632-9	SWITCH	1
6	619239-0	ROTOR	1
7	638723-6	STATOR UNIT	1
7	195262-4	CONTROLLER SET	1
7	194923-3	STATOR SET	1
8	631829-9	LED CIRCUIT	1
9	643833-6	TERMINAL	1
10	231951-8	RING SPRING 11	1
11	267085-1	FLAT WASHER 12	1
12	233005-7	COMPRESSION SPRING 13	1
13	324878-0	SLEEVE	1
14	424362-6	BUMPER	1
15	452294-7	HAMMER CASE COVER	1
16	154590-6	HAMMER CASE COMPLETE	1
17	261108-7	NYLON WASHER 14	1
18	216001-0	STEEL BALL 3.5	2
19	325975-5	ANVIL M	1
20	325671-5	HAMMER	1
21	216001-0	STEEL BALL 3.5	24
22	267175-0	FLAT WASHER 24	1
23	234082-2	COMPRESSION SPRING 25	1
24	267766-7	CUP WASHER 14	1
25	216011-7	STEEL BALL 5.6	2
26	227233-4	SPUR GEAR 22	2
27	324552-0	SPINDLE	1
28	256253-1	PIN 5	2
29	267212-0	FLAT WASHER 12	1
30	227150-8	INTERNAL GEAR 51	1
31	211140-1	BALL BEARING 6901LLB	1
32	213507-9	O RING 40	1
33	158145-9	BEARING BOX COMPLETE	1
33		INC. 31	0
35	188922-5	HOUSING SET	1
35	263005-3	RUBBER PIN 6	2
35		INC. 1	0
36	140574-0	SWITCH PLATE COMPLETE	1
A01	266622-8	+ TRUSS HEAD SCREW M4X12	1
A02	346317-0	BELT CLIP	1
A03	DC18RA	DC18RA FAST CHARGER	1
A04	BL1830	BATTERY BL1830 SET	2
E01	891014-8	CAUTION LABEL	1