makita

アメリカ

Nibbler

MODEL JN3200

INSTRUCTION MANUAL

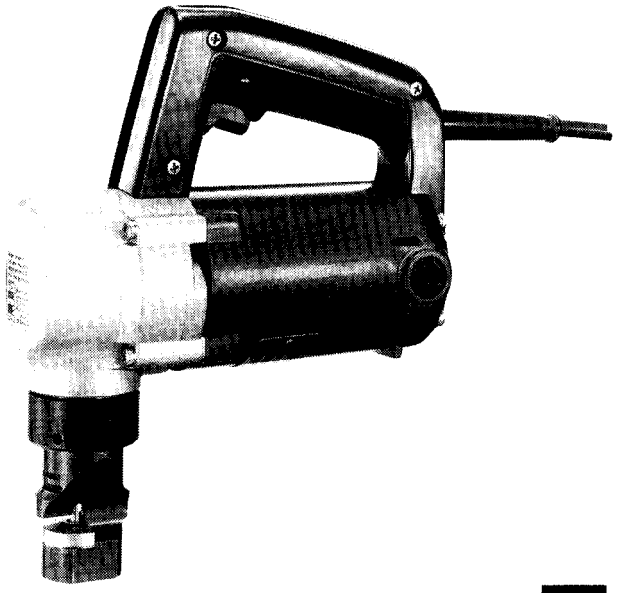

DOUBLE INSULATION

SPECIFICATIONS

Max. cutting capacities		Min. cutting radius		AMPS (115 V)	Strokes per minute	Overall length	Net weight	Power supply cord
Mild steel	Stainless	Outside edge	Inside edge					
3.2 mm (1/8")	2.5 mm (3/32")	128 mm (5-1/16")	120 mm (4-3/4")	6 A	1,300	215 mm (8-1/2")	3.4 kg (7.5 lbs)	2.5 m (8.2 ft.)

* Manufacturer reserves the right to change specifications without notice.
* Note: Specifications may differ from country to country.

IMPORTANT SAFETY INSTRUCTIONS

(For All Tools)

WARNING: WHEN USING ELECTRIC TOOLS, BASIC SAFETY PRECAUTIONS SHOULD ALWAYS BE FOLLOWED TO REDUCE THE RISK OF FIRE, ELECTRIC SHOCK, AND PERSONAL INJURY, INCLUDING THE FOLLOWING:

READ ALL INSTRUCTIONS.

1. KEEP WORK AREA CLEAN. Cluttered areas and benches invite injuries.
2. CONSIDER WORK AREA ENVIRONMENT. Don't use power tools in damp or wet locations. Keep work area well lit. Don't expose power tools to rain. Don't use tool in presence of flammable liquids or gases.
3. KEEP CHILDREN AWAY. All visitors should be kept away from work area. Don't let visitors contact tool or extension cord.
4. STORE IDLE TOOLS. When not in use, tools should be stored in dry, and high or locked-up place — out of reach of children.
5. DON'T FORCE TOOL. It will do the job better and safer at the rate for which it was intended.
6. USE RIGHT TOOL. Don't force small tool or attachment to do the job of a heavy-duty tool. Don't use tool for purpose not intended; for example, don't use circular saw for cutting tree limbs or logs.
7. DRESS PROPERLY. Don't wear loose clothing or jewelry. They can be caught in moving parts. Rubber gloves and non-skid footwear are recommended when working outdoors. Wear protective hair covering to contain long hair.
8. USE SAFETY GLASSES. Also use face or dust mask if cutting operation is dusty.
9. DON'T ABUSE CORD. Never carry tool by cord or yank it to disconnect from receptacle. Keep cord from heat, oil, and sharp edges.
10. SECURE WORK. Use clamps or a vise to hold work. It's safer than using your hand and it frees both hands to operate tool.
11. DON'T OVERREACH. Keep proper footing and balance at all times.
12. MAINTAIN TOOLS WITH CARE. Keep tools sharp and clean for better and safer performance. Follow instructions for lubricating and changing accessories. Inspect tool cords periodically and if damaged, have repaired by authorized service facility. Inspect extension cords periodically and replace if damaged. Keep handles dry, clean, and free from oil and grease.
13. DISCONNECT TOOLS. When not in use, before servicing, and when changing accessories, such as blades, bits, cutters.

14. REMOVE ADJUSTING KEYS AND WRENCHES. Form habit of checking to see that keys and adjusting wrenches are removed from tool before turning it on.
15. AVOID UNINTENTIONAL STARTING. Don't carry tool with finger on switch. Be sure switch is OFF when plugging in.
16. EXTENSION CORDS. Make sure your extension cord is in good condition. When using an extension cord, be sure to use one heavy enough to carry the current your product will draw. An undersized cord will cause a drop in line voltage resulting in loss of power and overheating. Table 1 shows the correct size to use depending on cord length and nameplate ampere rating. If in doubt, use the next heavier gage. The smaller the gage number, the heavier the cord.

TABLE 1 MINIMUM GAGE FOR CORD SETS

	Total Length of Cord in Feet			
	0 – 25	26 – 50	51 – 100	101 – 150
Ampere Rating More Than – Not More Than	A W G			
0 – 6	18	16	16	14
6 – 10	18	16	14	12
10 – 12	16	16	14	12
12 – 16	14	12	Not Recommended	

17. OUTDOOR USE EXTENSION CORDS. When tool is used outdoors, use only extension cords intended for use outdoors and so marked.
18. STAY ALERT. Watch what you are doing, use common sense. Don't operate tool when you are tired.
19. CHECK DAMAGED PARTS. Before further use of the tool, a guard or other part that is damaged should be carefully checked to determine that it will operate properly and perform its intended function. Check for alignment of moving parts, binding of moving parts, breakage of parts, mounting, and any other conditions that may affect its operation. A guard or other part that is damaged should be properly repaired or replaced by an authorized service center unless otherwise indicated elsewhere in this instruction manual. Have defective switches replaced by authorized service center. Don't use tool if switch does not turn it on and off.
20. GUARD AGAINST ELECTRIC SHOCK. Prevent body contact with grounded surfaces. For example; pipes, radiators, ranges, refrigerator enclosures.
21. REPLACEMENT PARTS. When servicing, use only identical replacement parts.
22. POLARIZED PLUGS. To reduce the risk of electric shock, this equipment has a polarized plug (one blade is wider than the other). This plug will fit in a polarized outlet only one way. If the plug does not fit fully in the outlet, reverse the plug. If it still does not fit, contact a qualified electrician to install the proper outlet. Do not change the plug in any way.

VOLTAGE WARNING: Before connecting the tool to a power source (receptacle, outlet, etc.) be sure the voltage supplied is the same as that specified on the nameplate of the tool. A power source with voltage greater than that specified *for the tool can result in* SERIOUS INJURY *to the user — as well as damage to* the tool. If in doubt, DO NOT PLUG IN THE TOOL. Using a power source with voltage less than the nameplate rating is harmful to the motor.

Nibbler & Standard Equipment

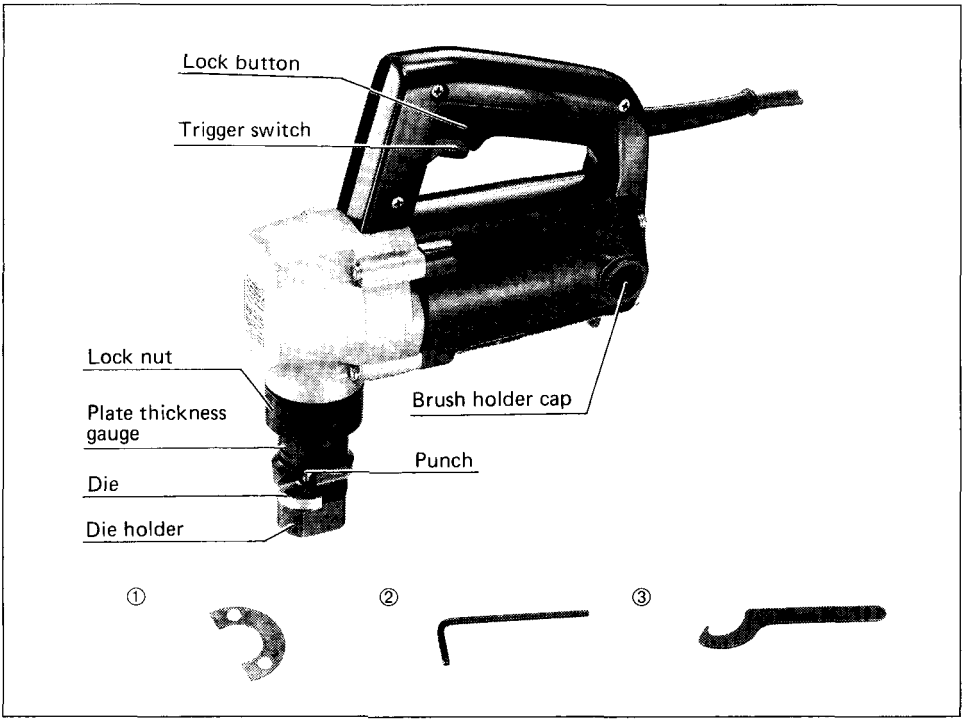

① Washer 2
(For die installation height adjustment)

② Hex wrench 1

③ Wrench (50) 1

How to use

Pre-lubrication

- The cutting line should be pre-lubricated with the following. For mild steel or stainless, use machine oil for aluminum light oil or kerosene.

Switch operation

- To start the tool, simply pull the trigger. Release the trigger to stop. For continuous operation without having to keep your finger on the trigger, just pull the trigger and then push in the lock button with your thumb. To stop the tool from the lock position, simply pull the trigger again and release it.

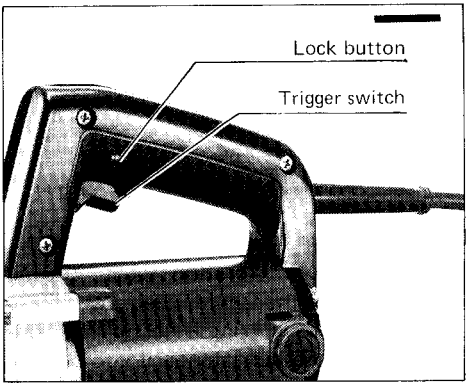

Permissible cutting thickness

- The thickness of material to be cut depends upon the tensile strength of the material itself. The groove on the die holder acts as a thickness gauge. Do not attempt to cut any material which will not fit into this groove.

Material	Tensile strength (kg . mm²)	Max. sheet thickness (mm)
Mild steel	40	3.2
Stainless	55	2.5
	80	1.5

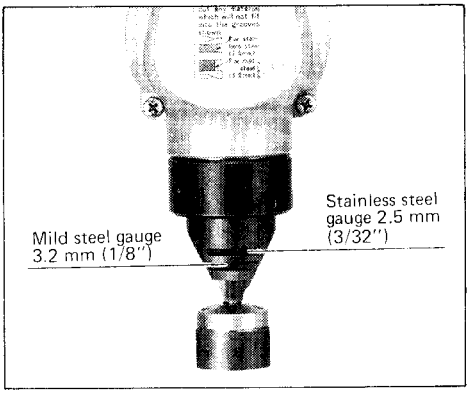

Cutting procedure

- Smooth nibbling is achieved by holding the nibbler upright and applying gentle pressure in the cutting direction. For clean cutting apply oil to the punch about every 10 meters (32.8 feet) of a material cut.

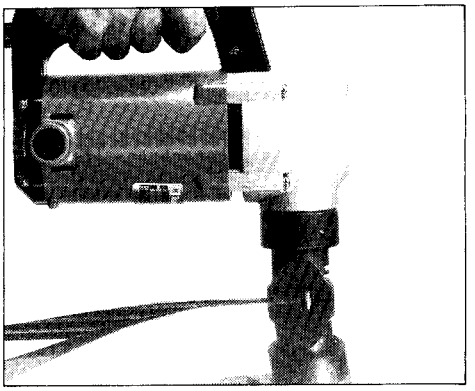

Cutouts

- Cutouts can be done by first opening a round hole of about 42 mm (1-5/8") dia. or more in the material.

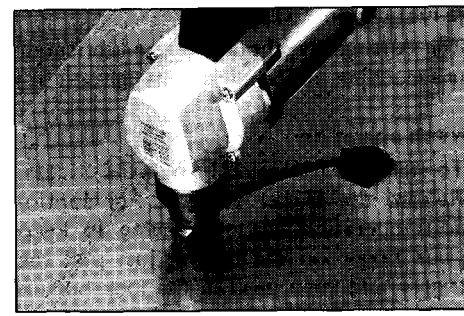

Cutting stainless steel

- There is more vibration when cutting stainless steel than mild steel. Less vibration and better cutting is possible by adding another washer (standard equipment) beneath the die.
- Use the hex wrench provided to remove the 2 screws and insert the washer below the die. Replace screws and tighten securely.

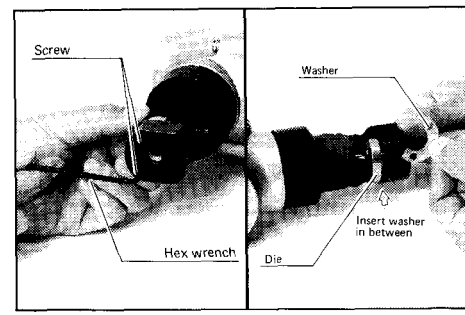

Punch replacement

- Fit the wrench provided onto the lock nut and tap the handle lightly with a hammer to loosen the nut.
- Then, take off the die holder and use the wrench provided to remove the screw to the left (counterclockwise), now remove the punch.

  Note: When installing the screw and lock nut, be sure to tighten securely. If they become loose during operation, the tool may break down.

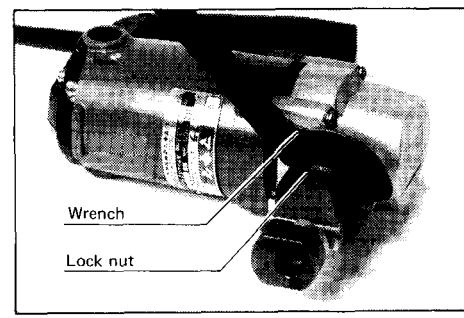

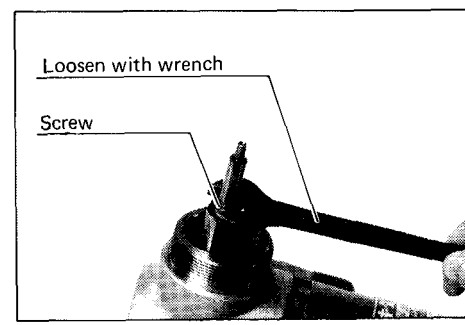

Maintenance

- After using, clean out the die area, lubricate with machine oil, run for a minute or two and store the tool.

Punch & die service life

- Replace or sharpen punch and die after cutting the lengths indicated in the accompanying table. Their life, of course, depends upon the thickness of materials cut and lubrication conditions.

Punch	Replace after 150 m (492.1 ft.) of 3.2 mm (1/8") steel sheet
Die	Sharpen after 300 m (984.3 ft.) of 3.2 mm (1/8") steel sheet

- When cutting is poor even after replacing the punch, sharpen the die. Grind down the dull edge shown in the figure using a grinder. After rough-grinding the dull portion, finish with a dressing stone. Stock removal should be about 0.3 to 0.4 mm (1/64") per pass; two passes should suffice.

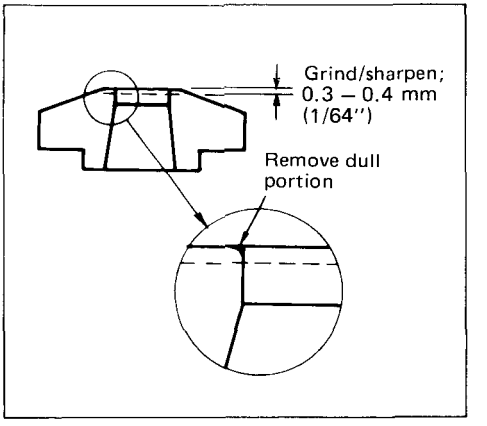

- When installing ground die, a clearance of 3.5 to 4.0 mm (1/8" to 5/32") should be obtained by attaching one or two of the washer provided, as shown in the figure. Failure to have the proper clearance will reulst in vibration during cutting.

  Caution;
  Secure installing screws carefully when installing. A loose screw can cause tool breakage during operation.

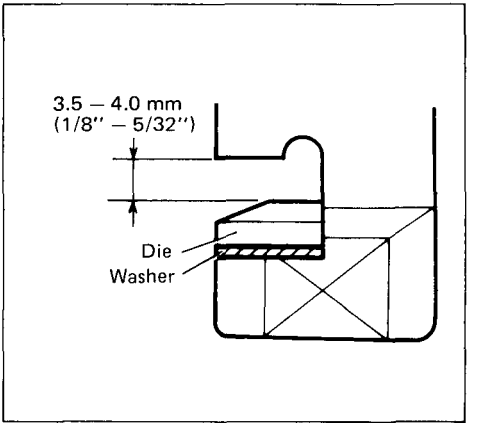

MAINTENANCE

CAUTION:
Always be sure that the tool is switched off and unplugged before attempting to perform inspection or maintenance.

Replacing carbon brushes

Remove and check the carbon brushes regularly. Replace when they wear down to the limit mark. Keep the carbon brushes clean and free to slip in the holders. Both carbon brushes should be replaced at the same time. Use only identical carbon brushes.

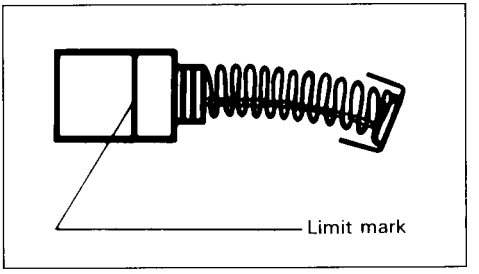

To replace the carbon brushes, unscrew the brush holder cap with a (—) screwdriver.

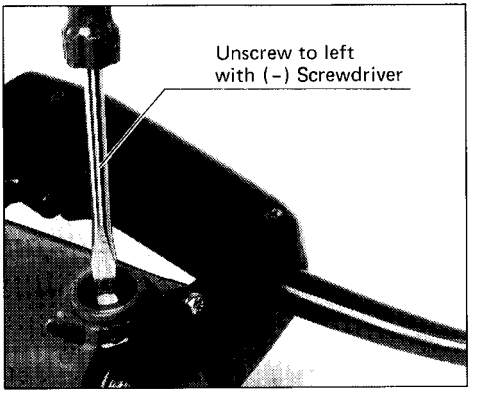

Remove the carbon brushes and insert new ones. Always replace both brushes at the same time.

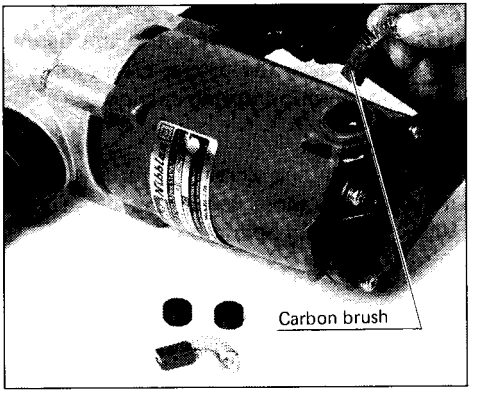

To maintain product SAFETY and RELIABILITY, repairs, any other maintenance or adjustment should be performed by Makita Authorized or Factory Service Centers, always using Makita replacement parts.

ACCESSORIES

CAUTION :

These accessories or attachments are recommended for use with your Makita tool specified in this manual. The use of any other accessories or attachments might present a risk of injury to persons. The accessories or attachments should be used only in the proper and intended manner.

- **Punch**
  Part No. 792291-4

- **Die**
  Part No. 792292-2

- **Washer**
  Part No. 341796-7
  (For die installation height adjustment)

- **Hex wrench**
  Part No. 783201-2

- **Wrench 50**
  Part No. 781019-5

- **Steel carrying case**
  Part No. 181795-5

NIBBLER
Model JN3200

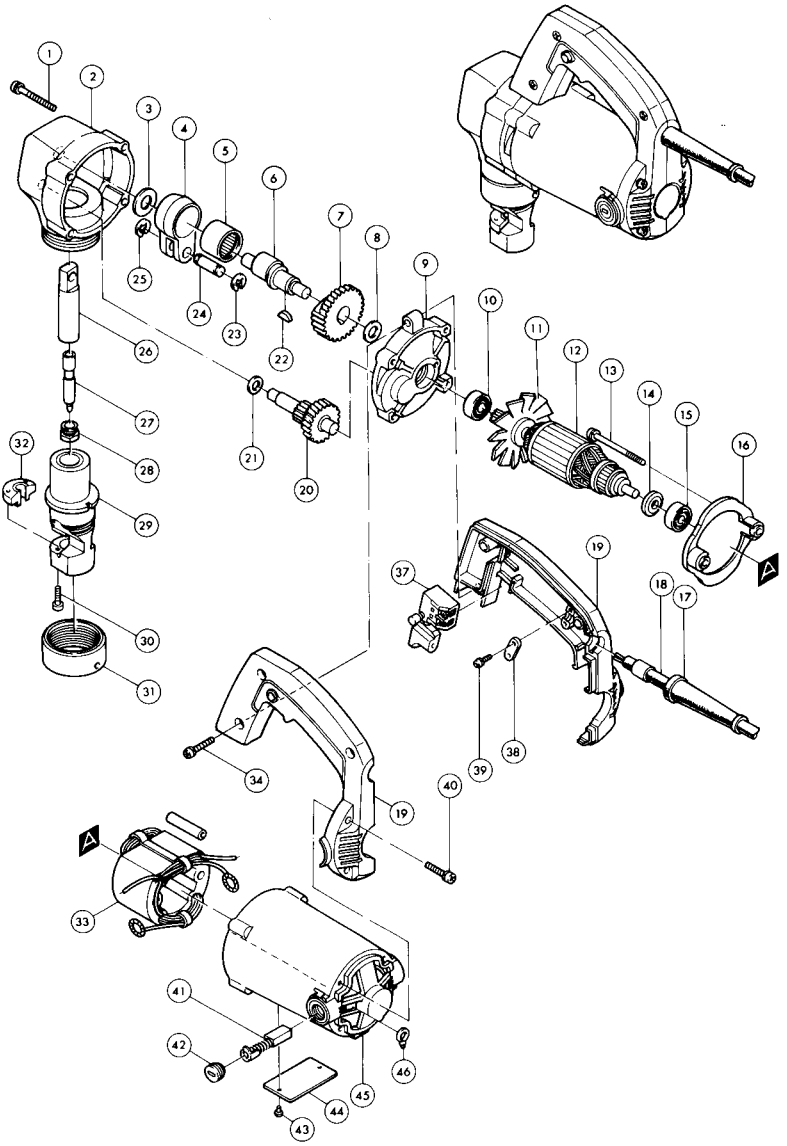

Note: The switch and other part configurations may differ from country to country.

ITEM NO.	NO. USED	DESCRIPTION
MACHINE		
1	4	Pan Head Screw M5x50 (With Washer)
2	1	Gear Housing
3	1	Flat Washer 12
4	1	Rod
5	1	Needle Bearing 2020
6	1	Crank Shaft
7	1	Spur Gear 44
8	1	Flat Washer 10
9	1	Gear Housing Cover
10	1	Ball Bearing 608LB
11	1	Fan 70
12	1	ARMATURE ASSEMBLY (With Item 10 – 12, 14 & 15)
13	2	Pan Head Screw M5x60 (With Washer)
14	1	Insulation Washer
15	1	Ball Bearing 608LB
16	1	Baffle Plate
17	1	Cord Guard
18	1	Cord
19	1	Handle Set (With Item 48)
20	1	Gear Complete 15--46
21	1	Flat Washer 8
22	1	Woodruff Key 4

ITEM NO.	NO. USED	DESCRIPTION
MACHINE		
23	1	Stop Ring E 7
24	1	Pin 9
25	1	Stop Ring E – 7
26	1	Punch Holder
27	1	Punch
28	1	Screw
29	1	Dice Holder
30	2	Hex. Socket Head Bolt M4x16
31	1	Lock Nut
32	1	Die
33	1	FIELD ASSEMBLY
34	3	Pan Head Screw M5x25 (With Washer)
37	1	Switch
38	1	Strain Relief
39	2	Pan Head Screw M4x18 (With Washer)
40	4	Pan Head Screw M5x25 (With Washer)
41	2	Carbon Brush
42	2	Brush Holder Cap
43	2	Rivet 0 3
44	1	Name Plate
45	1	Motor Housing
46	1	Band
48	1	Handle Set (With Item 19)

Note: The switch and other part specifications may differ from country to country.

アメリカ

MAKITA LIMITED ONE YEAR WARRANTY

Warranty Policy

Every Makita tool is thoroughly inspected and tested before leaving the factory. It is warranted to be free of defects from workmanship and materials for the period of ONE YEAR from the date of original purchase. Should any trouble develop during this one-year period, return the COMPLETE tool, freight prepaid, to one of Makita's Factory or Authorized Service Centers. If inspection shows the trouble is caused by defective workmanship or material, Makita will repair (or at our option, replace) without charge.

This Warranty does not apply where:

- repairs have been made or attempted by others:
- repairs are required because of normal wear and tear:
- The tool has been abused, misused or improperly maintained;
- alterations have been made to the tool.

IN NO EVENT SHALL MAKITA BE LIABLE FOR ANY INDIRECT, INCIDENTAL OR CONSEQUENTIAL DAMAGES FROM THE SALE OR USE OF THE PRODUCT. THIS DISCLAIMER APPLIES BOTH DURING AND AFTER THE TERM OF THIS WARRANTY.

MAKITA DISCLAIMS LIABILITY FOR ANY IMPLIED WARRANTIES, INCLUDING IMPLIED WARRANTIES OF "MERCHANTABILITY" AND "FITNESS FOR A SPECIFIC PURPOSE," AFTER THE ONE-YEAR TERM OF THIS WARRANTY.

This Warranty gives you specific legal rights, and you may also have other rights which vary from state to state. Some states do not allow the exclusion or limitation of incidental or consequential damages, so the above limitation or exclusion may not apply to you. Some states do not allow limitation on how long an implied warranty lasts, so the above limitation may not apply to you.

Makita Corporation
3-11-8, Sumiyoshi-cho,
Anjo, Aichi 446 Japan

883334A066

PRINTED IN JAPAN
1994 — 11 — N