7-7/8" BLADE SHARPENER

Model 9820-2

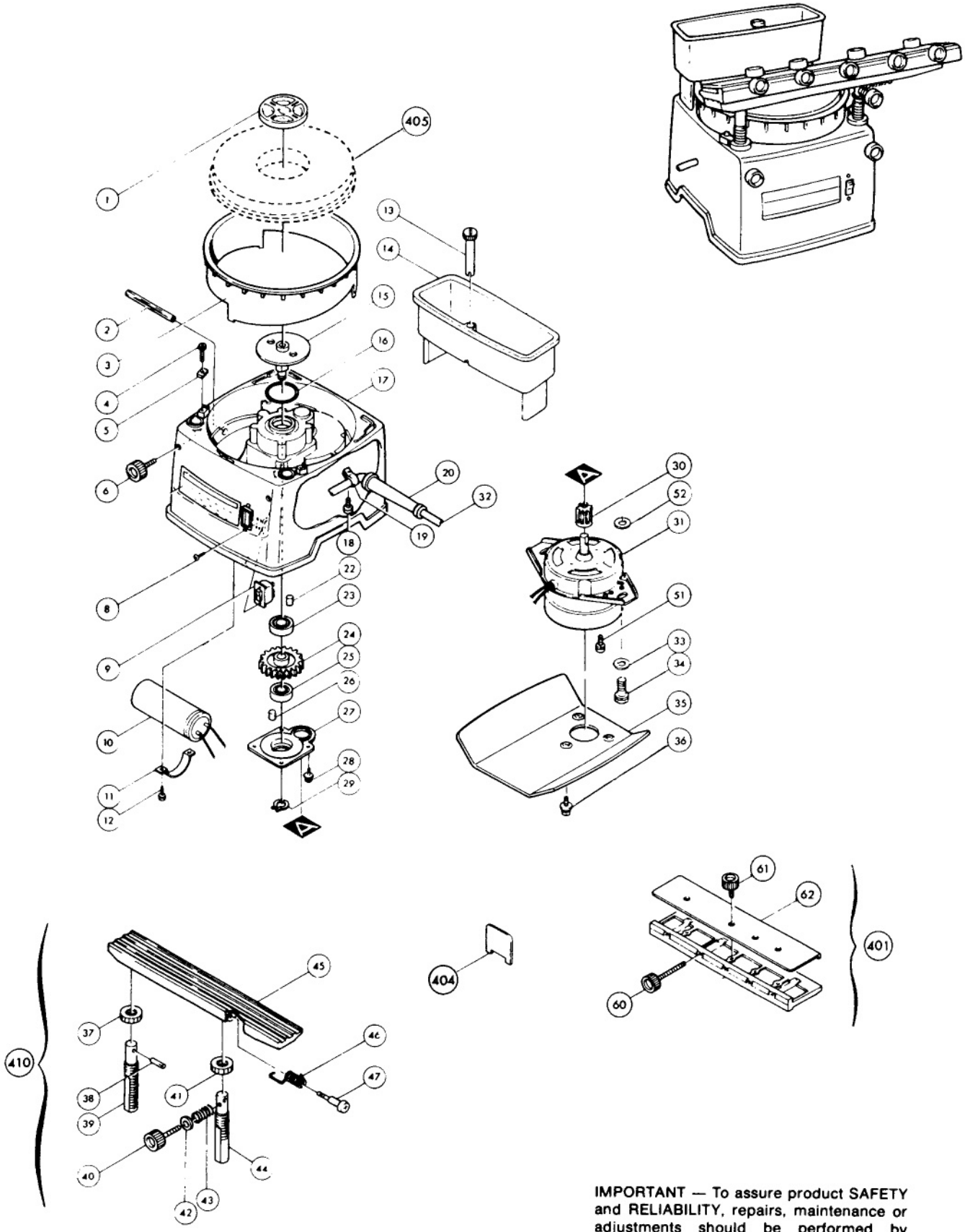

IMPORTANT — To assure product SAFETY and RELIABILITY, repairs, maintenance or adjustments should be performed by MAKITA Service Centers or other qualified service organizations. Always use MAKITA replacement parts.

Fig.	Part No.	Qty. Used	Description
1	271235-2	1	LOCK NUT
2	412033-7	1	TUBE
3	411429-9	1	WHEEL COVER
4	911231-5	2	SCREW M5X20
5	341392-1	2	SET PLATE
6	251847-7	2	KNOB M6X31
8	912002-3	2	C.H.SCREW M3X6
9	651502-5	1	SWITCH
10	645314-6	1	CAPACITOR
11	687629-5	1	CAPACITOR CLAMP
12	911231-5	2	SCREW M5X20
13	271405-3	1	ADJUSTING KNOB
14	411431-2	1	WATER RESERVOIR
15	314087-9	1	SPINDLE
16	213504-5	1	O RING 40
17	*	1	FRAME
18	911116-5	1	SCREW M4X12
19	687608-3	1	STRAIN RELIEF
20	682502-4	1	CORD GUARD
22	263002-9	1	RUBBER PIN 4
23	211206-7	1	BALL BEARING 6202LLB
24	221643-7	1	GEAR
25	211106-1	1	BALL BEARING 6201LLB
26	263002-9	1	RUBBER PIN 4
27	411430-4	1	GEAR COVER
28	911249-6	4	SCREW M5X28
29	961052-5	1	RETAINING RING S12
30	221642-9	1	GEAR
31	**	1	MOTOR
32	664630-7	1	CORD WITH PLUG (3X18X8;SJ)
33	941251-5	2	WASHER 10
34	921551-9	2	H.BOLT M10X30
35	**	1	UNDER COVER
36	**	0	SCREW
37	252619-3	1	NUT M16
38	256712-5	1	PIN 6
39	325540-0	1	SUB POLE
40	251817-6	1	KNOB M6X41
41	252619-3	1	NUT M16
42	941151-9	2	F.WASHER 6
43	231255-2	1	COMPRESSION SPRING 7
44	325539-5	1	MAIN POLE
45	311419-1	1	RAIL
46	231529-7	1	TORSION SPRING 8
47	251271-4	1	SCREW M6
51	682014-1	2	PAN HEAD SCREW M4X8
52	•	2	WASHER 10
60	251860-5	5	KNOB M6X71
61	251814-2	4	KNOB M6X18
62	341413-9	1	BLADE SET PLATE 400
ACCESSORIES			
401	123061-4A	1	BLADEHOLDER ASSEMBLY (Assembled with Fig.60~62)
404	341391-3	1	WRENCH
405	741070-7	1	GRINDING WHEEL #1000 (Medium)
410	122209-5	1	RAIL ASSEMBLY (Assembled with Fig.37~47)

*SEE SERVICE CHANGE 1
**SEE SERVICE CHANGE 2

SERVICE CHANGE

1) Change on Frame.

TYPE 1

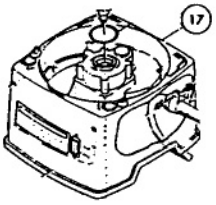

TYPE 2

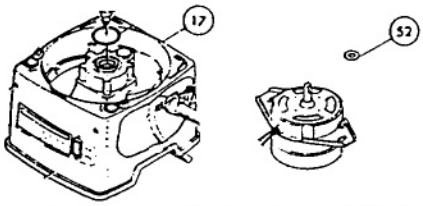

FIG.	DESCRIPTION	TYPE 1	TYPE 2
17	Frame	PART# 155220-2 (Discontinued)	PART# 151274-7
52	Washer 10	----------	PART# 267040-3 (2 ea.) (See Service Change 2)

The above parts are interchangeable as a set.

2) Change on Motor from S/N 30,058E.

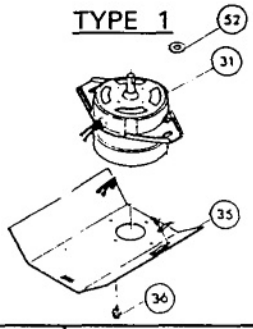

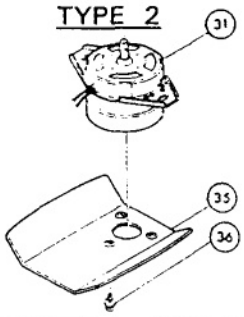

FIG.	DESCRIPTION	TYPE 1	TYPE 2
31	Motor	PART# 629510-4 (Discontinued)	PART# 629644-3
35	Under Cover	PART# 342516-2 (Discontinued)	PART# 344030-4
36	Screw	PART# 911104-2 M4x6 (Use 4 ea.)	PART# 911108-4 M4x8 (Use 3 ea.)
52	Washer	PART# 267040-3 (Discontinued)	----------

The above parts are interchangeable as a set.